Four Rivers
Sanitation Authority

Board President
Richard T. Pollack

Board Vice President
Benjamin W. Bernsten

Board Clerk/Treasurer
Ginger Haas

Board Trustee
Donald J. Massier

Board Trustee
Elmer Jones

Executive Director
Timothy S. Hanson

FOR REVIEW PURPOSES ONLY

FOUR RIVERS SANITATON AUTHORITY
INVITATION TO BID #23-203
MANHOLE FRAMES & LIDS

Date: December 15, 2022

Name of Bidding Firm: _____

Address: _____

City: _____ State: _____ Zip: _____

Phone: _____

Email: _____

Bid Opening Time & Date: 2:00 p.m., January 5, 2023

Bids will be accepted until the specified opening time and date. Any bid delivered after the opening time and date will be refused.

The public bid opening will take place in person and may be accessed remotely with the following information:

From computer, tablet or smartphone: *https://meet.goto.com/797374317*

Dial in by phone: *+1 (571) 317-3122*

Access Code: *797-374-317*

Mandatory Pre-Bid Meeting: N
Performance Bond: Y
Prevailing Wage: N
Bid Bond: Y

PLEASE MARK THE RETURN SEALED ENVELOPE:

1. Bid Due Date and Time
2. Title of Job
3. Bid Number

SEND BIDS TO:

Four Rivers Sanitation Authority
3501 Kishwaukee Street
Rockford, IL 61109

BIDS WILL NOT BE ACCEPTED BY FAX OR EMAIL.

The Illinois Department of Human Rights registration number must be provided with the bid on the bid opening due date.

Bid results are available after contracts are awarded at the Regular Meeting of the Board of Trustees, held on the fourth Monday of the month. Please call 815-387-7425 or visit fourrivers.illinois.gov

SECTION I
NOTICE

INVITATION TO BID #23-203
MANHOLE FRAMES & LIDS

FOR REVIEW PURPOSES ONLY

I

NOTICE
FOUR RIVERS SANITATION AUTHORITY
INVITATION TO BID #23-203
MANHOLE FRAMES & LIDS

The Four Rivers Sanitation Authority will receive sealed, signed bids for **Manhole Frames & Lids** at the Authority's offices, 3501 Kishwaukee Street, Rockford, IL 61109 until 2:00 p.m. January 5, 2023. The bid opening will be in-person, and will also be available via computer or phone by connecting as follows:

Meeting link: https://meet.goto.com/797374317

Join by phone: +1 (571) 317-3122

Access Code: 797-374-317

The scope of this project involves the purchase of Neenah R-1670 self-sealing, non-rocking manhole frames and lids (or equivalent); Neenah R-1670 self-sealing, non-rocking, heavy-duty lids (or equivalent); Neenah R-1647-A low-profile, self-sealing, non-rocking, heavy-duty frames and lids (or equivalent); Neenah R-1772 self-sealing, heavy-duty lids (or equivalent); Neenah R-1915J self-sealing, heavy-duty frames and lids (or equivalent) with three (3) equidistant bolt holes in flanges on 30" diameter bolt circle for ½" anchor bolts; Neenah R-1973-1 riser casing and lid (or equivalent), as specified in the Four Rivers Sanitation Authority *General Provisions and Technical Specifications for Sanitary Sewer Construction.*

Each bid must be accompanied by cash or a certified or bank cashier's check on a solvent bank or trust company, drawn to the order of the Four Rivers Sanitation Authority, or an acceptable Bid Bond on the form attached, in an amount not less than ten percent (10%) of the total bid price. This sum is a guarantee that, if the bid is accepted, a contract will be entered into.

The successful bidder will be required to furnish a satisfactory performance and payment of vendor bonds in the full amount of bid.

Copies of the Invitation to Bid for review purposes only are available through the Four Rivers Sanitation Authority web site, fourrivers.illinois.gov. Bid documents for submittal may be requested by emailing purchasing@fourrivers.illinois.gov or by calling (815) 387-7425.

No bid is to be withdrawn after the opening of bids without consent of the Four Rivers Sanitation Authority for a period of sixty (60) days after the closing time of receipt of bids.

The Four Rivers Sanitation Authority reserves the right to reject any or all bids, or any part thereof, or to accept any or all bids, or any part thereof, or to waive any formalities in any bids, deemed in the best interest of the Four Rivers Sanitation Authority.

The Authority will confirm any award decision in writing, to the successful bidder.

Julia Scott-Valdez

Julia Scott-Valdez
Director of Management Services
Four Rivers Sanitation Authority

FOR REVIEW PURPOSES ONLY

SECTION II
GENERAL SPECIFICATIONS & INSTRUCTIONS

INVITATION TO BID #23-203
MANHOLE FRAMES & LIDS

FOR REVIEW PURPOSES ONLY

II
GENERAL SPECIFICATIONS & INSTRUCTIONS
FOUR RIVERS SANITATION AUTHORITY
INVITATION TO BID #23-203
MANHOLE FRAMES & LIDS

2.1 Bid Preparation

Where applicable, bidder must submit their bid on the forms the Authority provides in this document. **The bidder must complete all applicable blanks**. They may submit additional information as they believe necessary on their stationery, under signature of the authorized representative who completes this document's forms.

If this Invitation to Bid contains inconsistencies or contradictions between sections, Section III - Detailed Specifications supersede Section II - General Specifications, which supersede Section I - Notice. **No warranty is made or implied as to information contained in these specifications.**

An authorized officer or individual must sign the bid. The Authorized signature must be the individual owner of a proprietorship, a general partner of a partnership, or the corporation officer who is authorized to sign for a firm and whose title is affixed.

All prices and notations must be in ink or typewritten. The bidder may cross out mistakes and type corrections adjacent to the point of error. The person who signs the bid must initial such corrections, in ink. **If the Authority finds a bidder's entry to be illegible, it may, at its sole discretion, reject the bid.**

2.2 Submission of Bids

The Authority **will not** receive bids in electronic format, by e-mail or internet or by facsimile. The bidder must return their bid in a sealed envelope, clearly marked as **ITB #23-203 Manhole Frames & Lids. The Authority cannot ensure that the sealed bid will not be prematurely opened if the bidder does not clearly identify their bid envelope.**

Bids should be addressed to:

Four Rivers Sanitation Authority
3501 Kishwaukee Street
Rockford, IL 61109

If the bidder chooses to hand-deliver their bid, they must deposit it at the Graceffa Administration Building main lobby Bid Box or handed to the Customer Service receptionist, 3501 Kishwaukee Street, Rockford, IL 61109 between the hours of 8:00 A.M. and 4:30 P.M., Monday through Friday, except for holidays.

The Authority cannot represent or guarantee that any information submitted in response to the Invitation to Bid will be confidential. If the Authority receives a request for any document submitted in response to the Invitation to Bid, the Authority's sole responsibility will be to notify respondent of a request for such document to allow the respondent to seek protection from disclosure in a court of competent jurisdiction. No documentation will be provided under FOIA until the contract has been awarded.

FOR REVIEW PURPOSES ONLY

2.3 Bid Security

Each bid must be accompanied either by cash, an original certified or bank cashier's check on a solvent bank or trust company, or a bidder's bond (form attached) from acceptable surety, drawn to the order of the Four Rivers Sanitation Authority in an amount of not less than ten percent (10%) of the bid price, issued by a surety company licensed to conduct business in the State of Illinois and named in the current list of "Surety Companies Acceptable On Federal Bonds" as published in the Federal Register by the Audit Staff Bureau of Accounts, U.S. Treasury Department. Failure to provide a Bid Security in the amount specified will constitute sufficient cause for rejection of the bid.

Within three (3) days after the opening of bids, the bid securities of all but the three lowest bidders will be returned. The bid security of the remaining two unsuccessful bidders will be returned within three (3) days after the execution of the contract, or, if no such contract has been executed, within sixty (60) days after the date of opening of bids. The bid security of the successful bidder will be returned only after he has duly executed the contract and furnished the required insurance.

2.4 Performance Bond and Payment of Vendor Bond

The successful bidder shall provide a Performance Bond and Payment of Vendor Bond acceptable to the Four Rivers Sanitation Authority. The performance bond shall be for either 100% of the annual contract price or for the successful bidder's unit price times the estimated number of units, as applicable. The performance bond shall be submitted annually on or before its expiration date, and within 10 business days of the award anniversary date for the entire length of the Contract period.

This Invitation to Bid contains a Performance Bond form and Payment of Vendor Bond for the successful bidder's use.

The successful bidder shall be in default if the acceptable bonds are not provided within the specified time.

2.5 Illinois Department of Human Rights Registration Number

All bidders inside and outside of Illinois must provide an Illinois Department of Human Rights Registration Number at the time bids are due. This number must be written or typed on the line in the Fair Employment Affidavit of Compliance (included in this document). The following link may be used to access the website where the number can be obtained: https://www2.illinois.gov/dhr/PublicContracts/Pages/default.aspx

2.6 Taxes

This Authority is exempt, by law, from paying bidder Federal Excise Tax and Illinois Retailers' Occupational Tax. Therefore, the bidder must exclude those taxes from their bid. The Authority's tax exemption number is E9992-3696. The bidder must include all applicable taxes in their bid price.

2.7 Withdrawal of Bids

At any time prior to the scheduled bid opening, the bidder may withdraw their bid. In order to do so, they must submit a written request to the Director of Management Services.

FOR REVIEW PURPOSES ONLY

2.8 Acceptance of Bid

The Authority may reject all or part of any or all bids, for any reason. The Authority may accept all or part of any bid or waive any bidding formalities if it decides such action is in the Authority's best interest.

The Authority will only consider bids that conform to the intent of this document. The Authority will reject bids that contain one or more exceptions if the Authority determines that non-conforming bids deviate from the intent of these specifications. The Authority's decision is final, and the Authority's procurement procedures contain no appeal provision.

2.9 Laws and Regulations

The bidder who is awarded the contract must comply with all laws of the United States of America, the State of Illinois, and all lawful regulations of the Four Rivers Sanitation Authority and the respective cities and villages in which the service, material or equipment supplied is to be performed respecting labor and compensation and all other statutes, ordinances, rules and regulations applicable and having the force of the law.

A. Illinois Regulations

1. In accordance with Illinois Public Act 102-0265, the Four Rivers Sanitation Authority is required to make a good faith effort to collect and publish certain demographic information provided by vendors and subcontractors doing business with the Authority. The Act requires FRSA to report whether a vendor or subcontractor is a minority, women, or veteran-owned business as defined by Illinois Law. In addition, the Authority is required to disclose if the business is certified as a small business under federal Small Business Administration standards. The successful bidder will be required to provide this information upon contract award/execution.

2. Prevailing Wage - Public Act 100-1177 (820 ILCS 130) requires the Bidder to comply with prevailing wages in accordance with the Illinois Department of Labor Standards. The State of Illinois requires contractors and subcontractors on Authority projects to submit certified payroll reports via the State's Certified Transcript of Payroll Portal currently found at:

   https://www2.illinois.gov/idol/Laws-rules/CONMED/Pages/certifiedtranscriptofpayroll.aspx.

   The Bidder is responsible for verifying current information at the State's website.

3. Public Act 83–1030 (30 ILCS 565) entitled "Steel Products Procurement Act" requires that steel products used or supplied in performance of this contract or subcontract must be manufactured or produced in the United States with three exceptions.

   The provisions of this Section do not apply:

   a. Where the contract involves an expenditure of less than $500.

   b. Where the executive head of the public agency certifies in writing that
      i. the specified products are not manufactured or produced in the United States in sufficient quantities to meet the agency's requirements, or

FOR REVIEW PURPOSES ONLY

ii. obtaining the specified products, manufactured or produced in the United States would increase the cost of the contract by more than 10%.

c. When its application is not in the public interest.

4. Public Act 96-929 (30 ILCS 570) provides that Illinois residents be employed on Illinois public works projects, provided there has been a period of excessive unemployment (5%) in the State of Illinois as defined in the Act; and, further, that Illinois workers are available and capable of performing the particular type work involved.

5. Public Act 101-0221 requires that any party to a contract adopt and promulgate written sexual harassment policies that include, as a minimum, the following information:

   a. the illegality of sexual harassment
   b. the definition of sexual harassment under Illinois State law
   c. a description of sexual harassment, utilizing examples
   d. my (our) organization's internal complaint process including penalties
   e. the legal recourse, investigative and complaint process available through the Illinois Department of Human Rights and the Illinois Human Rights Commission
   f. directions on how to contact the Department and the Commission
   g. protection against retaliation as provided by Section 6-101 of the Illinois Human Rights Act

   Upon request, this information must be provided to the Illinois Department of Human Rights and AUTHORITY.

6. With regard to nondiscrimination in employment, the Contractor for this project will be required to comply with the Illinois Fair Employment Practices Commission's Rules and Regulations.

7. The Contractor for this project must comply with the Occupational Safety and Health Act.

8. The Contractor for this project must comply with the Federal Drug-Free Workplace Act.

9. Americans with Disabilities Act - The Contractor for this project will comply with all applicable requirements of the Americans with Disabilities Act of 1990 (ADA). The Contractor will hold harmless and indemnify Four Rivers Sanitation Authority (Authority) and their representatives from all:

   a) suits, claims, or actions
   b) costs, either for defense (including but not limited to reasonable attorney's fees and expert witness fees) or for settlement
   c) damages of any kind (including but not limited to actual, punitive, and compensatory damages)

   relating in any way to or arising out of the ADA, to which said firm is exposed or which it incurs in the execution of the contract.

FOR REVIEW PURPOSES ONLY

2.10 Terms

A. Payments to the Successful Bidder. If the Authority receives an acceptable invoice for conforming materials or service prior to the fifth day of the month, the Authority will issue payment before the fifth day of the succeeding month. If received on or after the fifth day of the month, payment will be issued the following month.

B. Default. In case of default, the Authority will procure the materials or service described in this Invitation to Bid from other sources. The Authority will hold the defaulting successful bidder responsible for any excess cost incurred. The defaulting successful bidder must make such payment no more than sixty (60) calendar days after the Authority notifies them, in writing, of such an occurrence.

C, Delivery Hours. Unless otherwise specified, all items must be delivered to: Four Rivers Sanitation Authority, 4850 Torque Road, Loves Park, Illinois, 61111 Monday through Friday, between the hours of 7:30 A.M. and 3:00 P.M., excluding holidays.

In the unlikely event that the Authority is picketed by its employees or by a third party, or if any labor-management dispute between the Authority and its employees or third parties becomes known to the successful bidder, then in such event and during the course of any such picketing or labor-management dispute, the successful bidder must continue to carry out the terms and conditions of this contract as if such pickets were not present or such labor-management dispute did not exist.

Time of delivery is part of the Authority's consideration of each bid.

D. F.O.B. Point and Shipping Charges. All prices must be quoted F.O.B. destination, Four Rivers Sanitation Authority, 4850 Torque Road, Loves Park, Illinois, 61111. All shipping, handling and freight charges must be included in the bid amount.

E. Use of the Authority Name Prohibited. In the absence of the Authority's written permission, the successful bidder must not use the Authority's name in any form or medium of public advertising.

2.11 Quantities Estimated Only

The estimated quantities of the various items of work and materials, as set forth in the bid form, is approximate only and is given solely to be used as a uniform basis for the comparison of bids. The quantities actually required to complete the contract work may be less or more than so estimated, and if awarded a contract for the work specified, the Contractor further agrees that they will not make any claim for damages or for loss of profits or for an extension of time because of a difference between the quantities of the various classes of work assumed for comparison of bids and quantities of work performed.

2.12 Investigation

It is the responsibility of the bidder to make any and all investigations necessary to become thoroughly informed of what is required and specified in the bid document. No plea of ignorance by the bidder of conditions that exist or that may hereafter exist as a result of failure or omission on the part of the bidder to make necessary examinations and investigations will be accepted on a basis for varying the requirements of the Authority or

FOR REVIEW PURPOSES ONLY

the compensation of the bidder.

2.13 Addenda and Interpretation
No interpretation of the meaning of the Plans, Specifications, or other Contract Documents will be made to any bidder orally. Every request for such interpretation must be in writing addressed to the Four Rivers Sanitation Authority, 3501 Kishwaukee Street, Rockford, Illinois. Any and all such interpretations and any supplemental instructions will be in the form of written addenda. To be given consideration, such request must be received at least five (5) days prior to the proposal due date.

If the Authority issues written addenda, such addenda become part of the contract documents. Not less than three (3) business days prior to the bid opening date, the Authority will post the addenda, if any, on its website at fourrivers.illinois.gov, and distribute the addenda via email to each recipient of the specifications, at either the:

- Email address to which the Authority emailed the original bid document; or
- Corrected email address prospective bidder furnished

A bidder that does not receive the Authority's addenda, and who has previously submitted a bid, is not relieved from any obligation in the bid they submitted.

2.14 Contract Form
No more than ten (10) business days following the contract award, the successful bidder must submit a completed Contract Form to the Authority's Director of Management Services. The Contract Form is part of this Invitation to Bid. If the successful bidder fails to complete the Contract Form within the specified time, they are in material default.

2.15 Contract Termination
A. Bidder's Unacceptable Performance. If the successful bidder fails to perform services or provide materials in conformity with this Invitation to Bid, the Authority will notify them in writing. If the successful bidder fails to correct the performance deficiency to the Authority's satisfaction within five (5) working days after they receive the Authority's notice, they are in default. If the same performance deficiency recurs despite the Authority's notification and the successful bidder's temporary correction, the successful bidder is likewise in default. The Authority may, at its sole discretion, terminate the **Manhole Frames & Lids** contract with the defaulting successful bidder, and remedy the matter under provisions set forth in Section 2.10B of this Invitation to Bid.

B. Authority's Action Following Contract Termination. If the contract is terminated, the Authority may, at its sole option:

1. request new Manhole Frames & Lids bids or
2. designate the next-low bidder to perform the **Manhole Frames & Lids** contract, provided that said next-low bidder agrees to their original bid terms.

The Authority may repeat this option until it obtains an acceptable **Manhole Frames & Lids** contract.

FOR REVIEW PURPOSES ONLY

2.16 "No Bid" Response Form
In the event you elect not to bid, please fill out and return the attached "No Bid" form.

2.17 Indemnification Clause
To the fullest extent provided by law, successful bidder must protect, indemnify, hold and save harmless and defend the Authority, its officers, officials, employees, volunteers, and agents against any and all claims, costs, causes, actions and expenses, including but not limited to attorney's fees incurred by reason of a lawsuit or claim for compensation arising in favor of any person, including the employees, officers, independent contractors, or subcontractors of the successful respondent/ contractor or Authority, on account of personal injuries or death, or damages to property occurring, growing out of, incident to, or resulting directly or indirectly from the performance by the successful respondent/contractor or subcontractor, whether such loss, damage, injury, or liability is contributed to by the negligence of the Authority or by premises themselves or any equipment thereon whether latent or patent, or from other causes whatsoever, except that the successful respondent/contractor to have no liability for damages or the costs incident thereto caused by the sole negligence of the Authority.

The indemnification must not be limited by a limitation on amount or type of damages payable by or for the successful respondent/contractor or its subcontractor under any employee benefits act including, but not limited, to the Workers' Compensation Act.

No inspection by the Authority, its employees, or agents is deemed a waiver by the Authority of full compliance with the requirements of the Contract. This indemnification must not be limited by the required minimum insurance coverage in the Contract.

2.18 Force Majeure
The obligations of either the Authority or the successful bidder are suspended during the time as such party is prevented from complying therewith in whole or in part because of any cause, except financial, beyond the reasonable control of such party. In the event of either the Authority or the successful bidder being rendered unable wholly or in part by force majeure to carry out its obligations under the contract, other than to make payments due, it is agreed that on such party giving notice and full particulars of such force majeure in writing to the other party as soon as possible after the occurrence of the cause relied on, then the obligations of the parties insofar as they are affected by such force majeure are suspended during the continuance of any inability so caused but for no longer period, and such cause must as far as possible be remedied with all reasonable dispatch.

2.19 Insurance
A. The successful respondent/contractor, for the duration of the contract, must maintain the following:

General Liability: $1,000,000 combined single limit per occurrence for bodily injury, personal injury and property damage. If Commercial General Liability Insurance or other form with a general aggregate limit is used, either the general aggregate limit must apply separately to this project or the general aggregate limit must be twice the required occurrence limit.

Auto Liability: $1,000,000 combined single limit per accident for bodily injury and property damage including coverages for owned, hired or non-owned vehicles, as applicable.

FOR REVIEW PURPOSES ONLY

Workers' Compensation and Employers' Liability: Workers' Compensation limits as required by statute and Employers' Liability limits of $500,000 per accident and $500,000 per disease.

Umbrella: $2,000,000 per occurrence/aggregate.

The policies must contain, or be endorsed to afford Contractual Liability coverages for the following provisions in the General Liability and Automobile Liability coverages:

1. The Authority, its officers, officials, employees, and volunteers must be covered as additional insureds as respects liability arising out of activities performed by or on insured's general supervision of the successful respondent/contractor, products and completed operations of the successful respondent/contractor, premises owned, occupied or used by the successful respondent/contractor, or automobiles owned, leased, hired, or borrowed by the successful respondent/contractor. The coverage must contain no special limitations on the scope of protection afforded to the Authority, its officers, officials, employees, volunteers, or agents.

2. The successful bidder's/contractor's insurance coverage must be primary insurance as respects the Authority, its officers, officials, employees, volunteers, and agents. Any insurance or self-insurance maintained by the Authority, its officers, official employees, volunteers, or agents must be in excess of the successful respondent's/contractor's insurance and must not contribute with it.

3. Any failure to comply with reporting provisions of the policies must not affect coverage provided to the Authority, its officers, officials, employees, volunteers, or agents.

4. The successful respondent's/contractor's insurance must apply separately to each insured against whom claim is made or suit is brought, except with respect to the limits of the insurer's liability.

B. Proof of Insurance – Certificate of Insurance. No more than ten (10) calendar days subsequent to the Authority's issuance of an award letter and no later than thirty (30) days before commencement to work, the successful respondent/contractor must provide documentation including a Certificate of Insurance, and primary, non-contributory additional insured endorsements for general and auto liability to prove that it has obtained all required insurance and bonds. The Certificate of Insurance must state Four Rivers Sanitation Authority is additional insured under the commercial general liability and automobile liability on a primary, non-contributory basis. The primary, non-contributory additional insured endorsements for commercial general liability and automobile liability must be provided. The Authority is the sole judge as to the acceptability of any such proof.

C. Correction of Successful Bidder's Insurance Deficiencies. If the Authority determines that the successful bidder's insurance or documentation does not conform to these specifications, the Authority to inform said bidder of the non-conformity. If said bidder fails to provide conforming insurance or documentation within five (5) calendar days of the Authority's notice, they are in default.

D. Best's Ratings.

1. <u>Alphabetical Rating</u>. For purposes of this Request for Bids, "insurer" means any surety, insurance carrier, or other organization which proposes to provide an insurance

FOR REVIEW PURPOSES ONLY

policy or bond for the successful respondent/contractor. No insurer or surety rated lower than "A-," **Excellent**, in the current Best's Key Rating Guide is acceptable to the Authority.

2. Financial Size Rating. Provided an insurer's alphabetical rating is satisfactory, the Authority will examine said insurer's financial size rating.

a) If Best classifies the insurer XII or larger, said insurer is acceptable to the Authority.

b) If Best classifies the insurer as smaller than XII, but larger than VI, said **insurer must be submitted to the Authority's Director of Management Services and/or the Authority's insurance consultant for review.**

Financial Size ratings less than VII are not acceptable and will disqualify the respondent/contractor.

E. Suitability of Insurance. The Authority is the sole judge of whether an insurer's rating is satisfactory. The Authority's decision is final and the Authority's bidding procedures contain no appeal provision.

2.20 Responsive/Responsible Bidder

A. Evaluation of Responsiveness. The responsiveness of bidders will be judged on the basis of the completeness of the bid submitted. To be responsive, a Bid must be submitted on the forms provided as part of the Bid Documents and comply with all the requirements of the Invitation to Bid.

B. Evaluation of Responsibility. To be judged as responsible, the bidder must:

1. Have adequate financial resources for performance, the necessary experience, organization, technical qualifications, and facilities, or a firm commitment to obtain such by subcontracts;
2. Be able to comply with the required completion schedule for the project;
3. Have a satisfactory record of integrity, judgment, and performance, including, in particular, any prior performance on contracts from the Authority;
4. Have an adequate financial management system and audit procedures, that provide efficient and effective accountability and control of all property, funds, and assets;
5. Conform to the civil rights, equal employment opportunity and labor law requirements of the Bid Documents.

FOR REVIEW PURPOSES ONLY

SECTION III
DETAILED SPECIFICATIONS

INVITATION TO BID #23-203
MANHOLE FRAMES & LIDS

FOR REVIEW PURPOSES ONLY

III
DETAILED SPECIFICATIONS
FOUR RIVERS SANITATION AUTHORITY
INVITATION TO BID #23-203
MANHOLE FRAMES & LIDS

3.1 Scope & Intent

It is the intent of this document to specify minimum requirements that the successful bidder must meet in order for the Authority to obtain manhole frames and lids that meet the requirements of the Four Rivers Sanitation Authority.

3.2 Minimum Requirements

A. General

All frames and lids shall be gray iron as manufactured by the Neenah Foundry Company or equivalent. Frames and lids shall be of uniform quality, free of blowholes, shrinkage, distortion or other defects. They shall be smooth and thoroughly cleaned by shot-blasting. All gray iron shall conform to ASTM A48–83 Class 35B.

All frames and lids shall be manufactured true to pattern; all component parts shall fit together in a satisfactory manner. All frames & lids shall be unpainted. Frames & lids shall have continuously machined bearing surfaces to prevent rocking. As-cast dimensions may vary ±1/16" per foot.”Deviation from published weight shall not exceed ±5%.

All frames and lids shall be heavy duty, suitable for highway traffic or H20 wheel loads of 16,000 lbs.

B. Manhole Lids

All manhole lids shall be the self–sealing type. All gaskets shall be of a material acceptable to the Four Rivers Sanitation Authority and shall be pre–installed and glued in place. The gasket shall be continuous and fit into a machined dovetail groove.

All lids shall have concealed pick holes of an acceptable design that do not allow water to enter the lid.

All pick holes shall be designed per the attached drawing, or Authority approved equivalent.

All lids shall have Four Rivers Sanitation Authority logo and lettering in the center of the lid per the attached drawing.

When specified, lids shall be non–rocking with a pointed lug and graduated rack. Each tooth in the rack shall vary diameter of the opening by 1/32".

Where ”equired, cap screws or other hardware shall be stainless steel, with the lid designed such that they are coun’ersunk.

C. Submittals

Manufacturer's shop dra’ings shall be submitted to the Four Rivers Sanitation Authority prior to manufacturing or shipping of the frames & lids to the Four Rivers Sanitation Authority.

FOR REVIEW PURPOSES ONLY

The Four Rivers Sanitation Authority shall retain the right to reject frames and lids not conforming to this bid document and/or approved shop drawings.

3.3 Fees

All bids must include all fees associated with the purchase including any shipping, delivery or doc fees.

3.4 Warranty

Manufacturers shall unconditionally warrant their products for a period of two (2) years commencing on the date of delivery. Supplier shall, upon written notice, furnish labor and new materials to immediately replace and make good, without expense to the Four Rivers Sanitation Authority, faulty materials and equipment. Any such replacement shall likewise be covered by the same warranty period from subsequent delivery date.

3.5 Payments to the Successful Bidder

Section 2.10A of this Invitation to Bid contains the Authority's general ’ayment requirements.

3.6 Questions

Interested parties may direct questions concerning this Invitation to Bid to Terry Stoll, Collection Systems Maintenance Division Manager; 815-387-7588; email: tstoll@fourrivers.illinois.gov. The Authority will not interpret specifications for individual bidders. If the Authority determines that the specifications need to be clarified or revised, it will issue an addendum to all prospective bidders.

FOR REVIEW PURPOSES ONLY

SECTION IV
BID FORM

INVITATION TO BID #23-203
MANHOLE FRAMES & LIDS

FOR REVIEW PURPOSES ONLY

IV
BID FORM
FOUR RIVERS SANITATION AUTHORITY
INVITATION TO BID #23-203
MANHOLE FRAMES & LIDS

Failure to complete this form will result in disqualification of Vendor's bid or proposal.

To: BOARD OF TRUSTEES
FOUR RIVERS
SANITATION AUTHORITY
3501 KISHWAUKEE ST.
ROCKFORD, IL 61109

From: _____
(Individual, Partnership or Corporation)

_____
(Address of Individual, Partnership or Corporation)

Trustees:

I (We) the undersigned hereby propose to furnish the **Manhole Frames & Lids** in compliance with the attached Introduction, General Specifications and Instructions, Detailed Specifications, Bid Form, Fair Employment Practices Affidavit of Compliance Form, Forms of Affidavit, and Contract Form.

The Undersigned also affirms and declares:

A. That they have examined and are familiar with all the related contract documents and found that they are accurate and complete and are approved by the undersigned.
B. That they have carefully examined the scope of the required service, materials or equipment supplied, and that, from their own investigation, have satisfied themselves as to the nature and location of the delivery point, the character, quality and quantity of materials, and the kind and extent of equipment and other facilities needed for the performance of the service and provision of the materials, the general and local conditions and all difficulties to be encountered, and all other items which may, in any way, affect the services, materials, or equipment or their performance.
C. That this bid is made without any understanding, contract or connection with any other person, partnership, or corporation making a bid for the same purposes, and is in all respects fair and without collusion or fraud; and that they are not barred from submitting a bid as a result of a bid-rigging or bid-rotating conviction.
D. All goods and services provided in response to this request will be produced in compliance with all applicable requirements of the Fair Labor Standards Act, as amended, and of regulations and orders of the United States Department of Labor.
E. The firm which I (we) represent complies with all applicable requirements of the Americans with Disabilities Act (ADA), the Occupational Safety and Health Act (OSHA), rules and regulations of the US Department of Transportation (DOT), and the Federal Drug Free Work-Place Act. If said firm is awarded a contract to provide the Authority's **Manhole Frames & Lids,** it will:

1. complete all OSHA, ADA, and DOT required supervisory, employee and customer training,

FOR REVIEW PURPOSES ONLY

2. document compliance as required,
3. ensure that persons in safety-sensitive positions associated with loading, transportation, and delivery of the merchandise or service detailed in these specifications are subject to all required drug and alcohol testing and are properly licensed,
4. prepare and make available all required information and documentation, and
5. hold harmless and indemnify the Authority and the Authority's representatives as defined in Section 2.17 from all:
    a. Suits, claims, or actions;
    b. Costs, either for defense (including but not limited to reasonable attorney's fees and expert witness fees) or for settlements, and;
    c. Damages of any kind (including but not limited to fines, actual, punitive, and compensatory damages) relating in any way to or arising out of the ADA or the OSHA, to which said firm is exposed or which it incurs in the execution of the contract.

F. The firm which I (we) represent has adopted and promulgated written sexual harassment policies that include, at a minimum, the following information:

1. the illegality of sexual harassment;
2. the definition of sexual harassment under Illinois State Law;
3. a description of sexual harassment, utilizing examples;
4. my (our) organization's internal complaint process including penalties;
5. the legal recourse, investigative and complaint process available through the Illinois Department of Human Rights and the Illinois Human Rights Commission;
6. directions on how to contact the Department and the Commission; and
7. protection against retaliation as provided by Section 6-101 of Illinois Human Rights Act. (775 ILCS 5)

Upon request, my (our) organization will provide the Illinois Department of Human Rights with the information described in F1 through F7 above.

In submitting this bid, I (we) agree that I (we) are not withdraw this bid for a period of sixty (60) calendar days following the scheduled bid opening. I (we) have carefully examined the nature of the service, materials, and equipment. The cost of all the service, materials, and equipment necessary to complete this contract is given in this bid.

The selected proposer is to enter into a Contract with the Authority to complete the Project in a form substantially similar to the Contract attached hereto. The Contract must be executed by the Contractor/Vendor and returned, together with the Insurance Documents and Performance Bond (if applicable) within ten (10) calendar days after it has been mailed to the Contractor. Two copies of the contract must be executed by the Contractor. One fully executed copy will be returned to the Contractor. See Section VIII for a sample copy of the agreement.

FOR REVIEW PURPOSES ONLY

BID FORM CONT'D.
FOUR RIVERS SANITATION AUTHORITY
INVITATION TO BID #23-203
MANHOLE FRAMES & LIDS

AS SPECIFIED IN THIS INVITATION TO BID

Failure to complete this form will result in disqualification of Vendor's bid.

Item No.	Quantity And Unit	Descriptive Title	Unit Price (In Figures)	Total Price (In Figures)
1	350 Ea.	Neenah R-1670 self-sealing, non-rocking, heavy-duty frames and lids (or equivalent)	$	$
2	300 Ea.	Neenah R-1670 self-sealing, non-rocking, heavy-duty lids (or equivalent)	$	$
3	20 Ea.	Neenah R-1647-A low-profile, self-sealing, non-rocking, heavy-duty frames and lids (or equivalent)	$	$
4	50 Ea.	Neenah R-1772 Self-sealing, heavy-duty lids (or equivalent)	$	$
5	25 Ea.	Neenah R-1915J self-sealing, heavy-duty frames and lids (or equivalent) with three (3) equidistant bolt holes in flanges on 30" diameter bolt circle for ½" anchor bolts	$	$
6	80 Ea.	Neenah R-1973-1 riser casing and lid (or equivalent)	$	$
			Total Bid Price: (In Figures)	$

In conformity with the requirements of the Detailed Specifications, I have submitted attached to this request for bids and incorporated in my bid by reference prices and part descriptions sufficient for the Authority to evaluate my organization's bid.

The undersigned acknowledges that Addendum numbers ___, _____, _____were received, and realizes that all Addenda are considered part of the Contract.

Date: _____

By signing this bid, I/we, the bidder(s), agree to the terms of the bid, bid requirements, addenda, and contract.

FOR REVIEW PURPOSES ONLY

BID FORM CONT'D.
FOUR RIVERS SANITATION AUTHORITY
INVITATION TO BID #23-203
MANHOLE FRAMES & LIDS
Failure to complete this form will result in disqualification of Vendor's bid.

Bidder: _____	By: _____
(Print Name of Firm)	(Authorized Rep's Signature)
_____	_____
(Print Street Address)	(Print Rep's Name)
_____	_____
(Print City, State, Zip)	(Print Rep's Title)
_____	_____
(Area Code and Phone Number)	(Email Address)

NOTE: The Four Rivers Sanitation Authority, a Governmental Unit, pays neither Federal Excise Tax nor Illinois Retailers' Occupational Tax. The bidder must exclude those taxes from their bid.

FOR REVIEW PURPOSES ONLY

"NO BID" RESPONSE
TO
INVITATION TO BID

If your firm is unable to submit a bid at this time, would you please provide the information requested in the space provided below and return to:

Four Rivers Sanitation Authority
3501 Kishwaukee Street
Rockford, IL 61109

For this form only, responses can also be emailed to:

purchasing@fourrivers.illinois.gov

We have received Invitation to Bid: **Manhole Frames & Lids**, opening

at 2:00 p.m., January 5, 2023.

Reason for not bidding: _____

_____

_____

_____

BY: _____
Signature

_____
Name & Title, Typed or Printed

_____
Company Name

FOR REVIEW PURPOSES ONLY

SECTION V
FAIR EMPLOYMENT AFFIDAVIT OF COMPLIANCE

INVITATION TO BID #23-203
MANHOLE FRAMES & LIDS

FOR REVIEW PURPOSES ONLY

V

FAIR EMPLOYMENT PRACTICES AFFIDAVIT OF COMPLIANCE

Failure to complete this form will result in disqualification of Vendor's bid.

MANHOLE FRAMES & LIDS

NOTE: THE BIDDER MUST EXECUTE THIS AFFIDAVIT AND SUBMIT IT WITH ITS SIGNED BID. THE FOUR RIVERS SANITATION AUTHORITY CANNOT ACCEPT ANY BID WHICH DOES NOT CONTAIN THIS AFFIDAVIT

_____, being first duly sworn, deposes and says that:
(Name of person making affidavit)

They are: _____ of _____
(Officer's Title) (Company Name)

that said company is and "Equal Opportunity Employer" as defined by Section 2000(e) of Chapter 21, Title 42 of the United States Code annotated and Federal Executive Orders #11375 which are incorporated herein by reference;

and that said company will comply with any and all requirements of Title 44 Admin. Code 750. APPENDIX A – Equal Employment Opportunity Clause, Rules and Regulations, Illinois Department of Human Rights, which read as follows:

In the event of the contractor's non-compliance with the provisions of this Equal Employment Opportunity Clause or the Act, the contractor may be declared ineligible for future contracts or subcontracts with the State of Illinois or any of its political subdivisions or municipal corporations, and the contract may be cancelled or voided in whole or in part, and other sanctions or penalties may be imposed or remedies invoked as provided by statute or regulation. During the performance of this contract, the contractor agrees as follows:

1) That he or she will not discriminate against any employee or applicant for employment because of race, color, religion, sex, sexual orientation, marital status, order of protection status, national origin or ancestry, citizenship status, age, physical or mental disability unrelated to ability, military status or an unfavorable discharge from military service; and, further, that he or she will examine all job classifications to determine if minority persons or women are underutilized and will take appropriate affirmative action to rectify any underutilization.

2) That, if he or she hires additional employees in order to perform this contract or any portion of this contract, he or she will determine the availability (in accordance with this Part) of minorities and women in the areas from which he or she may reasonably recruit and he or she will hire for each job classification for which employees are hired in a way that minorities and women are not underutilized.

3) That, in all solicitations or advertisements for employees placed by him or her or on his or her behalf, he or she will state that all applicants will be afforded equal opportunity without discrimination because of race, color, religion, sex, sexual orientation, marital status, order of protection status, national origin or ancestry, citizenship status, age, physical or mental disability unrelated to ability, military status or an unfavorable discharge from military service.

4) That he or she will send to each labor organization or representative of workers with which he or she has or is bound by a collective bargaining or other agreement or understanding, a notice advising the labor organization or representative of the contractor's obligations under the Act and this Part. If any labor organization or representative fails or refuses to cooperate with the contractor in his or her efforts to comply with the Act and this Part, the contractor will promptly notify the Department and the contracting agency and will recruit employees from other sources when necessary to fulfill its obligations under the contract.

5) That he or she will submit reports as required by this Part, furnish all relevant information as may from time to time be requested by the Department or the contracting agency, and in all respects comply with the Act and this Part.

6) That he or she will permit access to all relevant books, records, accounts and work sites by personnel of the contracting agency and the Department for purposes of investigation to ascertain compliance with the Act and the Department's Rules and Regulations.

7) That he or she will include verbatim or by reference the provisions of this clause in every subcontract awarded under which any portion of the contract obligations are undertaken or assumed, so that the provisions will be binding upon the subcontractor. In the same manner as with other provisions of this contract, the contractor will be liable for compliance with applicable provisions of this clause by subcontractors; and further it will promptly notify the contracting agency and the Department in the event any subcontractor fails or refuses to comply with the provisions. In addition, the contractor will not utilize any subcontractor declared by the Illinois Human Rights Commission to be ineligible for contracts or subcontracts with the State of Illinois or any of its political subdivisions or municipal corporations.

(Source: Amended at 35 Ill. Reg. 3695, effective February 18, 2011)

IL Dept of Human Rights Registration No.: _____ Expiration Date: _____

Signature_____

Subscribed and sworn to before me this _____ day of _____, 20_____.

Notary Public _____

FOR REVIEW PURPOSES ONLY

SECTION VI
FORMS OF AFFIDAVIT

INVITATION TO BID #23-203
MANHOLE FRAMES & LIDS

FOR REVIEW PURPOSES ONLY

VI
FORMS OF AFFIDAVIT
FOUR RIVERS SANITATION AUTHORITY
INVITATION TO BID #23-203
MANHOLE FRAMES & LIDS

Failure to complete this form will result in disqualification of Vendor's bid.

Bidder City: _____ Bidder County: _____ Bidder State: _____

- - - -

SECTION VII
BID BOND

INVITATION TO BID #23-203
MANHOLE FRAMES & LIDS

FOR REVIEW PURPOSES ONLY

VII
BID BOND
FOUR RIVERS SANITATION AUTHORITY
ROCKFORD, ILLINOIS
MANHOLE FRAMES & LIDS

KNOW ALL MEN BY THESE PRESENT, that we:

_____ (hereinafter called the Principal) and

_____ (hereinafter called the Surety) a

Corporation chartered and existing under the laws of the State of _____

with its principal offices in the City of _____ and authorized to do business in the State of Illinois are held and firmly bound onto the Four Rivers Sanitation Authority of Winnebago County, Illinois (Authority), in the full and just sum of:

_____ Dollars

($_____) good lawful money of the United States of America, to be paid upon demand of the Authority, to which payment will and truly to be made we bind ourselves, our heirs, executors, administrators, and assigns, jointly and severally and firmly by these presents.

WHEREAS, the Principal is about to submit, or has submitted to the Authority, a bid for providing **Manhole Frames & Lids**.

WHEREAS, the Principal desires to file this bond, in accordance with law, in lieu of a certified bidder's check otherwise required to accompany this Bid.

FOR REVIEW PURPOSES ONLY

IN TESTIMONY THEREOF, the Principal and Surety have caused these presents to be duly signed and sealed this ___ day of _____, 20___.

_____

Principal

(Seal) By _____

Name: _____

Title: _____

Date: _____

ATTEST:

_____

_____

Surety

(Seal) By _____

Name: _____

Title: _____

Date: _____

FOR REVIEW PURPOSES ONLY

SECTION VIII
CONTRACT SAMPLE

INVITATION TO BID #23-203
MANHOLE FRAMES & LIDS

FOR REVIEW PURPOSES ONLY

VIII
CONTRACT
FOUR RIVERS SANITATION AUTHORITY
MANHOLE FRAMES & LIDS

THIS CONTRACT, made and concluded this ____ day of _____, 20_ _____,
between the Four Rivers Sanitation Authority, Illinois, also known as "Authority," and _____ their executors, administrators, successors or assigns, known as "Contractor":

In consideration of the payments and contracts mentioned in the Bid attached hereto, to be made and performed by the Authority, the Contractor agrees with the Authority at their own proper cost and expense to do all the work, furnish all equipment, materials and all labor necessary to complete the work and furnish the merchandise in accordance with the specifications hereinafter described, and the Authority's requirements.

1. Scope

Both parties understand and agree that the Introduction, General Specifications and Instructions, Detailed Specifications, Bid Form, Fair Employment Practices Affidavit of Compliance Form, and Forms of Affidavit of the Invitation to Bid: **Manhole Frames & Lids**, all Addenda there to (if any), and any and all provisions required by law, are all essential documents of the contract, and are a part hereof, as if herein set out verbatim or as if attached, except for titles, subtitles, headings, table of contents and portions specifically excluded.

Unless the Contractor and the Authority terminate the Contract by their mutual written Contract in conformity with Section II, 2.14 of the Invitation to Bid, the contractor must provide the **Authority's Manhole Frames & Lids** including delivery, at the bid price, over a 12-month period from May 1, 2023 through April 30, 2024.

The Successful Bidder must provide the Authority's **Manhole Frames & Lids** including delivery, at the bid price, and a 2-year warranty from date of delivery to the Authority.

2. Contract Price

The Authority will pay to the Contractor, and the Contractor will accept, in full payment for the performance of this Contract, subject to any additions or deductions provided for hereby, in current funds, the total contract price of:

_____($_____).

The Contractor fully understands and agrees that their bid price, delivered F.O.B. 4850 Torque Road, Loves Park, Illinois,61111 will be the only basis for payment for the contract's duration, and that in the absence of changes to which the Authority and Contractor agree because of revisions to the scope of the **Manhole Frames & Lids**, this contract allows for no price increases.

The Authority will make payments to the Contractor, in accordance with and subject to the provisions of Section 4 of this Contract.

SAMPLE
FOR REVIEW PURPOSES ONLY

3. Contract Execution

The Contractor must:

A. Perform all services in a responsible manner, supplying only service, materials, or equipment that meets or exceeds the Authority's specifications;

B. Deliver the Manhole Frames & Lids in conformity with the specifications;

C. Sustain all loss or damage arising out of the nature of the work to be done, or from any unforeseen obstruction or difficulty which they may encounter in the prosecution of the work, or from the action of the elements;

D. Be responsible for all accidents they, their employees, or agents may incur in the contract's execution;

E. Hold the Authority and its representatives harmless from liability of any nature or kind on account of use of any copyrighted or un-copyrighted composition, secret process, patented or unpatented invention, article or appliance furnished or used under this Contract. The Contractor must likewise hold harmless and indemnify the Authority and its representatives from all:

1. suits, claims, or actions,
2. costs, either for defense or for settlements, and
3. damages to which the Authority or its representatives might be exposed by reason of an injury or alleged injury, to the person or property of another:
   a. in the execution of the Contract, or
   b. from actions the Authority or its representatives take on the Contractor's behalf, except in cases where such suits, claims, actions, or costs are found to be based on the Authority's negligence. For purposes of this paragraph, "its representatives" means "the Four Rivers Sanitation Authority's trustees, employees, agents, assigns, and their heirs;"

F. Comply with all applicable requirements of the Americans with Disabilities Act (ADA), the Occupational Safety and Health Act (OSHA), rules and regulations of the US Department of Transportation (DOT), and the Federal Drug Free Work Place Act, and will:

1. complete all OSHA, ADA, and DOT required supervisory, employee and customer training,
2. document compliance as required,
3. ensure that persons in safety-sensitive positions associated with loading, transportation, and delivery of the merchandise or service detailed in these specifications are subject to all required drug and alcohol testing and are properly licensed,
4. prepare and make available all required information and documentation, and
5. hold harmless and indemnify the Authority and the Authority's representatives as defined in Section 2.17 from all:
   a. Suits, claims, or actions;
   b. Costs, either for defense (including but not limited to reasonable attorney's

FOR REVIEW PURPOSES ONLY
SAMPLE

fees and expert witness fees) or for settlements, and;

c. Damages of any kind (including but not limited to fines, actual, punitive, and compensatory damages) relating in any way to or arising out of the ADA or the OSHA, to which said firm is exposed or which it incurs in the execution of the contract.

G. Adopt and promulgate written sexual harassment policies that include, at a minimum, the following information:

1. the illegality of sexual harassment;
2. the definition of sexual harassment under Illinois State law;
3. a description of sexual harassment, utilizing examples;
4. Contractor's internal complaint process including penalties;
5. the legal recourse, investigative and complaint process available through the Illinois Department of Human Rights and the Illinois Human Rights Commission;
6. directions on how to contact the Department and the Commission; and
7. protection against retaliation as provided by Section 6-101 of Illinois Human Rights Act.

Upon request, Contractor will provide the Illinois Department of Human Rights with the information described in G1 through G7 above.

H. Maintain all specified insurance for the duration of the contract.

I. The Steel Products Procurement Act, Illinois Public Act 83-1030, requires that steel products used or supplied in performance of this Contract or subcontract must be manufactured or produced in the United States with three exceptions, as explained in the Instructions to Bidders.

J. In the absence of the Authority's written permission, the Contractor must not use the Authority's name in any form or medium of public advertising.

K. This Contract must extend to and be binding upon the successors and assigns, and upon the heirs, administrators, executors, and legal representatives of the Contractor.

In consideration of and to induce the award of this Contract to them, the Contractor represents and warrants: that they are not in arrears to the Authority upon debt of the Contract and that they are not a defaulter, as surety, contractor or otherwise; that they are financially solvent and sufficiently experienced and competent to perform the work; that the work can be performed as called for by the Contract; that the facts stated in their bid and the information given by them is true and correct in all respects, and that they are fully informed regarding all the conditions affecting the work to be done and labor and materials to be furnished for the completion of this Contract and that their information was secured by personal investigation and research.

If the Contractor defaults, the Authority may procure **Manhole Frames & Lids** described in this Invitation to Bid, from other sources. In such an event, the price the Authority pays constitutes the prevailing market price at the time of such purchase

FOR REVIEW PURPOSES ONLY
SAMPLE

and the defaulting Contractor must pay the Authority the difference between their bid price and the prevailing market price. The defaulting Contractor must make such payment no more than 60 calendar-days after the Authority notifies them, in writing, of such an occurrence.

4. Payments to Contractor

If the Authority receives an acceptable invoice for conforming service prior to the fifth day of the month, the Authority will issue payment before the fifth day of the succeeding month. If received on or after the fifth day of the month, payment will be issued the following month.

5. Subcontracts

No part of the work herein provided for is to be sublet or subcontracted without the express written consent of the Authority, and in no case will consent relieve said Contractor from the obligation herein entered into, or change the terms of this Contract.

6. Contractor's Responsibility

This Contract must extend to and be binding upon the successors and assigns, and upon the heirs, administrators, executors, and legal representatives of the Contractor.

7. Counterparts

This Agreement may be executed and recorded in counterparts, each of which is to be deemed an original and all of which, when taken together, constitutes one and the same instrument. The Parties hereby acknowledge and agree that facsimile signatures or signatures transmitted by electronic mail in so-called “pdf” format must be legal and binding and must have the same full force and effect as if an original of this Agreement had been delivered. Each of the parties (a) intend to be bound by the signatures on any document sent by facsimile or electronic mail, (b) are aware that the other party will rely on such signatures, and (c) hereby waive any defenses to the enforcement of the terms of this Agreement based on the foregoing forms of signature.

8. Time

The Contractor agrees to all delivery schedules specified in the Invitation to Bid.

FOR REVIEW PURPOSES ONLY
SAMPLE

9. Seals

IN WITNESS WHEREOF, the parties have hereunto set their hands, and are duly authorized to enter into such contracts on behalf of their respective organizations.

_____
Name of Firm - Contractor

By _____
Authorized Signature

ATTEST:

By: _____

Its: _____

Four Rivers Sanitation Authority
Winnebago County, Illinois

By _____
Executive Director

ATTEST: _____
Director of Management Services

STATE OF ILLINOIS)
COUNTY OF WINNEBAGO)

On this ____day of _____, 20_____ before me, a notary public within and for said County, personally appeared Timothy S. Hanson and Julia Scott-Valdez, to me personally known, who, being each by me duly sworn did say that they are respectively, the Executive Director and Director of Management Services of the Four Rivers Sanitation Authority, named in the foregoing instrument, and that said instrument was signed and sealed in behalf of the Authority, and said Executive Director and Director of Management Services acknowledge said instrument to be the free act and deed of said Authority.

(SEAL)

_____
Notary Public

FOR REVIEW PURPOSES ONLY
SAMPLE

SECTION IX
PERFORMANCE BOND

INVITATION TO BID #23-203
MANHOLE FRAMES & LIDS

FOR REVIEW PURPOSES ONLY

IX
PERFORMANCE BOND
FOUR RIVERS SANITATION AUTHORITY
ROCKFORD, ILLINOIS

KNOW ALL MEN BY THESE PRESENTS, that WHEREAS, the Four Rivers Sanitation Authority has awarded to:
_____hereinafter designated as the

"Principal", a contract, dated, _____, for the Four Rivers Sanitation Authority.

WHEREAS, said Principal is required under the terms of said Contract to furnish a bond for the faithful performance of said Contract (the "Bond");

NOW, THEREFORE, we the Principal and_____,
as Surety, are firmly bound unto the Four Rivers Sanitation Authority in the penal sum of
_____ Dollars ($_____)
lawful money of the United States for the payment of which sum well and truly to be made, we bind ourselves, our heirs, executors, administrators, successors and assigns, jointly and severally firmly by these presents for a performance bond. The conditions of this obligation is such that if the said Principal does well and faithfully performs all the conditions and covenants of said Contract, according to the true intent and meaning thereof, upon its part to be kept and performed, then the above obligation is to be null and void, otherwise to remain in full force and effect.

THE CONDITION OF THIS OBLIGATION IS SUCH, that if the above bounden Principal, its heirs, executors, administrators, successors or assigns, shall in all things stand to and abide by, and well and truly keep and perform the covenants, conditions and agreements in the said Contract, including the provisions for liquidated damages in the said Contract, any changes, additions or alterations thereof made as therein provided, on its part, to be kept and performed at the time and in the manner therein specified, and in all respects according to their true intent and meaning, and shall indemnify and save harmless the Four Rivers Sanitation Authority, its officers and agents, as therein stipulated, then this obligation shall become null and void; otherwise it shall be and remain in full force and effect. And the said Surety, for value received, hereby stipulates and agrees that no change, extension of time, alteration or addition to the terms of the Contract or to the work to be performed there under or the specifications accompanying the same and no inadvertent overpayment of progress payments shall in any way affect its obligations on this Bond, and it does hereby waive notice of any such change, extension of time, alteration or addition to the terms of the Contract or to the work or to the specifications or of any inadvertent overpayment of progress payments. The Four Rivers Sanitation Authority shall be named as beneficiary on this Performance Bond.

FOR REVIEW PURPOSES ONLY

IN WITNESS WHEREOF, the above-bounden parties have executed this instrument under their seal this _____day of _____, 20_____, the name and corporate seal of each corporate party being hereto affixed and these presents duly signed by its undersigned representative, pursuant to authority of its governing body.

(Seal)

Principal

By: _____

Name: _____

Title: _____

Date: _____

ATTEST:

Secretary: _____

(Seal)

Surety

By: _____

Name: _____

Title: _____

Date: _____

Countersigned: _____

FOR REVIEW PURPOSES ONLY

SECTION X
LABOR & MATERIAL PAYMENT BOND

INVITATION TO BID #23-203
MANHOLE FRAMES & LIDS

FOR REVIEW PURPOSES ONLY

X

LABOR & MATERIAL PAYMENT BOND
FOUR RIVERS SANITATION AUTHORITY
INVITATION TO BID

TO: _____Contractor Name

_____Contractor City, State

KNOW ALL MEN BY THESE PRESENTS:

That:_____(Contractor)

as Principal, and _____

a corporation of the State of _____ as Surety, are held and firmly bound unto the Four Rivers Sanitation Authority, as Obligee, for the use and benefit of claimants as hereinafter defined in the amount of

_____Dollars ($_____), for the payment where of Principal and Surety bind themselves, their heirs, executors, administrators, successors and assigns, jointly and severally, firmly by these presents.

WHEREAS, Principal has by written agreement dated _____20___ Entered into a Contract with Obligee for _____ in accordance with contract documents prepared by the Four Rivers Sanitation Authority which Contract is by reference made a part hereof, and is hereinafter referred to as "the Contract".

NOW, THEREFORE, THE CONDITION OF THIS OBLIGATION is such that if Principal shall promptly pay for all laborers, workers and mechanics engaged in the work under the Contract, and not less than the general prevailing rate of hourly wages of a similar character in the locality in which the work is performed, as determined by the State of Illinois Department of Labor pursuant to the Illinois Compiled Statutes 280 ILCS 130 / 1-12 et.seq. and for all material used or reasonably required for use in the performance of the Contract, then this obligation shall be void; otherwise it shall remain in full force and effect.

1. A claimant is deemed as any person, firm, or corporation having contracts with the Principal or with any of Principal's subcontractors for labor or materials furnished in the performance of the Contract on account of which this Bond is given.
2. Nothing in this Bond contained shall be taken to make the Obligee liable to any subcontractor, material man or laborer, or to any other person to any greater extent than it would have been liable prior to the enactment of The Public Construction Bond Act, approved June 20, 1931, as amended; provided further, that any person having a claim for labor and materials furnished in the performance of the Contract shall have no right of action unless he shall have filed a verified notice of such claim with the Obligee within 180 days after the date of the last item of work or the furnishing of the last item of materials, which claim shall have been verified and shall contain the name and address of the claimant, the business address of the claimant within the State of Illinois, if any, or if the claimant be a foreign corporation having no place of business within the State the principal place of business of the corporation, and in all cases of partnership the names and residences of each of the partners, the name of the Contractor for the Obligee, the name of the person, firm or corporation by whom the claimant was employed or to whom such claimant furnished materials, the amount of the claim and a brief description of the public

FOR REVIEW PURPOSES ONLY

improvement for the construction or installation of which the contract is to be performed. No defect in the notice herein provided for shall deprive the claimant of its right of action under the terms and provisions of this Bond unless it shall affirmatively appear that such defect has prejudiced the rights of an interested party asserting the same.

3. No action shall be brought on this Bond until the expiration of 120 days after the date of the last item of work or of the furnishing of the last item of material except in cases where the final settlement between Obligee and the Contractor shall have been made prior to the expiration of the 120 day period, in which case action may be taken immediately following such final settlement; nor shall any action of any kind be brought later than 6 months after the acceptance by the Obligee of the work. Such suit shall be brought only in the circuit court of this State in the judicial district in which the Contract is to be performed.
4. Surety hereby waives notice of any changes in the Contract, including extensions of time for the performance thereof.
5. The amount of this Bond shall be reduced by and to the extent of any payment or payments made in good faith hereunder.
6. The Principal and Surety shall be liable for any attorneys' fees, engineering costs, or court costs incurred by the Obligee relative to claims made against this Bond.

Signed and Sealed this _____day of _____, 20_____

CONTRACTOR	**SURETY**
_____	_____
By: _____	By: _____
Signature	Attorney-in-Fact
_____	_____
Title	Resident Agent

ATTEST:

_____

Corporate Secretary (Corporations only)

FOR REVIEW PURPOSES ONLY

DRAWING CONTROL: CONTROLLED DRAWINGS ON NFCO SERVER. ALL OTHER COPIES, ELECTRONIC OR PRINTED ARE FOR REFERENCE ONLY

PROPOSED FOR REVIEW PURPOSES ONLY

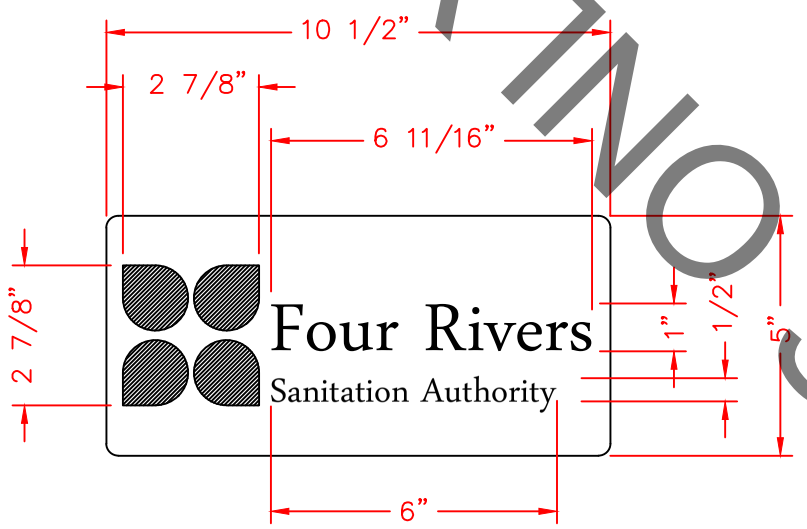

LOGO DETAIL
SCALE = 1/4

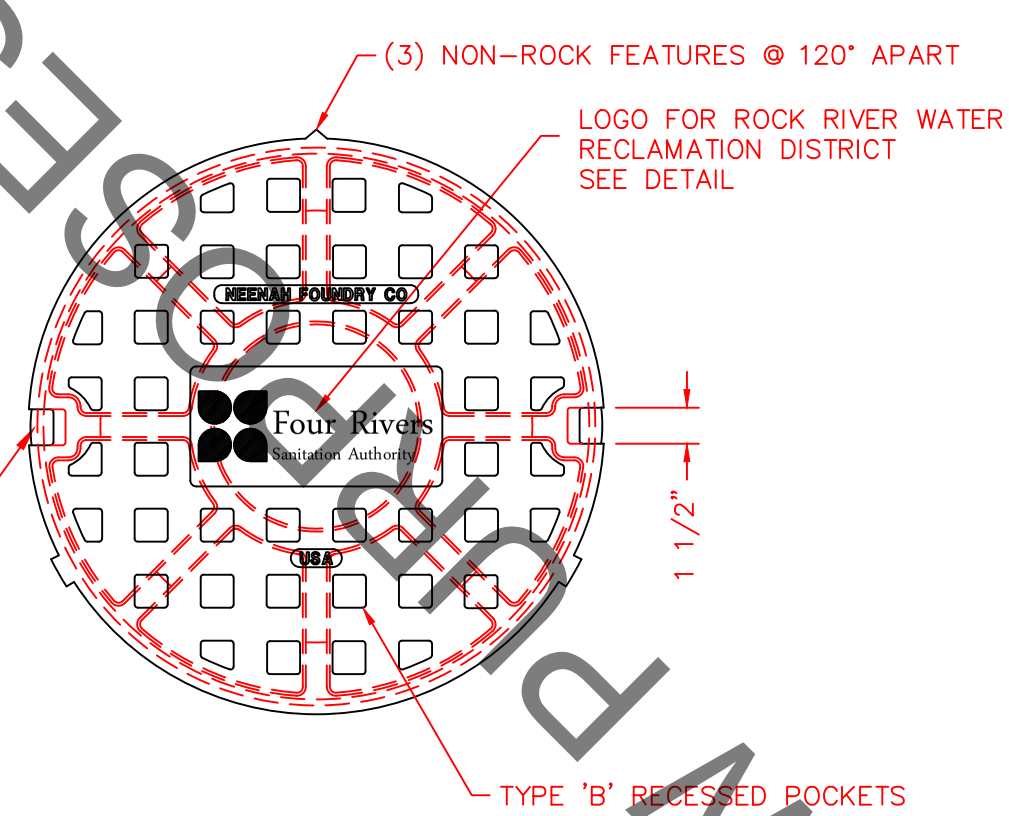

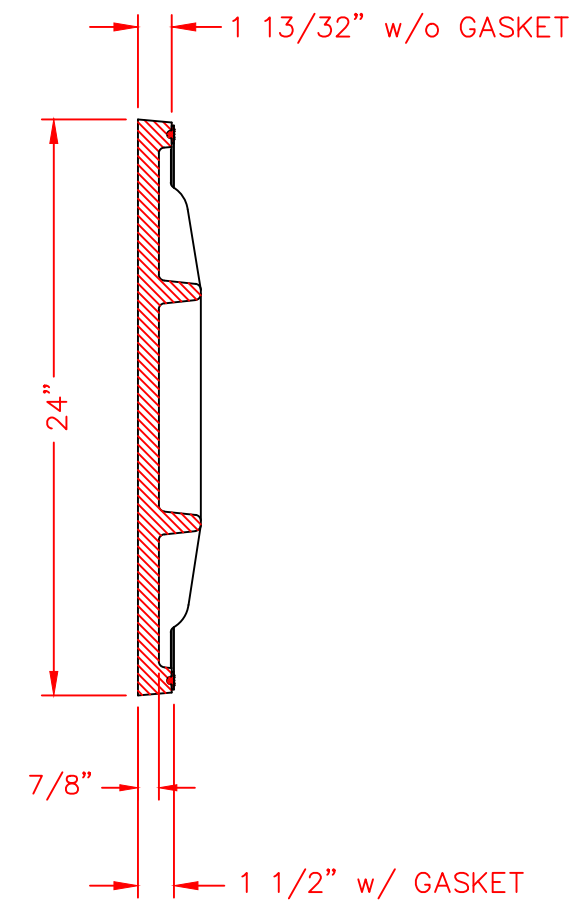

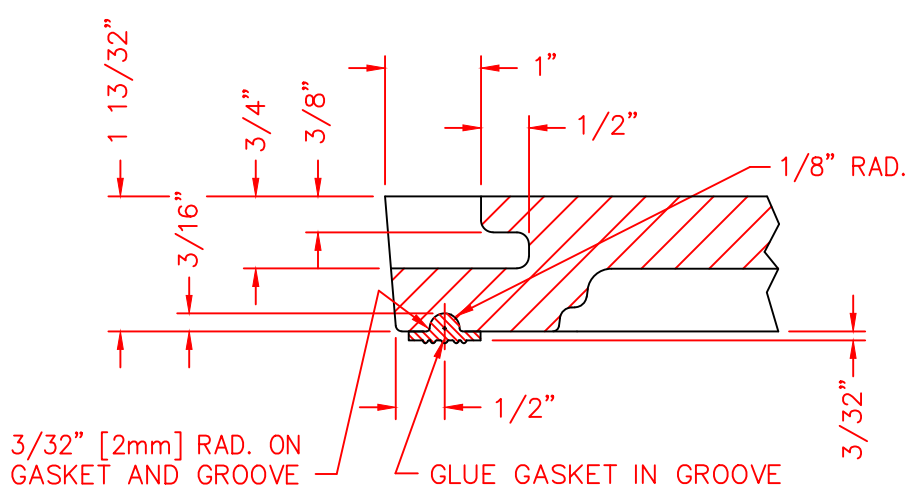

T-SEAL / CONCEALED PICK DETAIL
HALF SCALE
(GASKET NO. 02797)

NOTES:
- ALL DIMENSIONS SHOWN ARE IN ENGLISH.
- LOAD RATING: H-25 / HS-25
- EQUIPMENT NOS.: D99992978, K99999169
- MATERIAL: CAST GRAY IRON ASTM A-48, CLASS 35B
- FINISH: NO PAINT
- WEIGHT: ≈138#

REV	DATE	DESCRIPTION	DR	CH	APP
A	01-31-2022	ADDED LOGO DIMS	RKB	NJK	HSH

DR. RKB	SCALE 1/8"=1"	TITLE: R-1670 NON-ROCK SOLID LID W/ AS-CAST 'T' GASKET AND LOGO	
CH. NJK			
APP. HSH	NEENAH FOUNDRY NEENAH WISCONSIN 54956 PHONE 800-558-5075 LINCOLN, NEBRASKA 68529 PHONE 800-234-7466	NF-16700358	B
DATE 03-01-2021			
www.nfco.com			

CAD DWG. REF: 16700358.DWG- 1

FOR REVIEW PURPOSES ONLY