Four Rivers
Sanitation Authority

Board President
Richard T. Pollack

Board Vice President
John F. Sweeney

Board Clerk/Treasurer
Benjamin W. Bernsten

Board Trustee
Donald J. Massier

Board Trustee
Elmer Jones

Executive Director
Timothy S. Hanson

FOUR RIVERS SANITATON AUTHORITY
INVITATION TO BID #22-204

MANHOLE FRAMES & LIDS
MAY 1, 2022 – APRIL 30, 2023

Date: February 11, 2022

Name of Bidding Firm: _____

Address: _____

City: _____ State: _____ Zip: _____

Phone: _____

Email: _____

Bid Opening Time & Date: 2:00 p.m., March 4, 2022

Bids will be accepted until the specified opening time and date. Any bid delivered after the opening time and date will be refused.

The bid opening will be in-person, and will also be available via computer or phone by connecting as follows:

Meeting link: https://meet.goto.com/715151141

Join by phone: United States: +1 (872) 240-3311

Access Code: 715-151-141

Mandatory Pre-Proposal Meeting: N
Bid Bond: N
Performance Bond: N
Prevailing Wage: N

PLEASE MARK THE RETURN SEALED ENVELOPE:

1. Bid Due Date and Time
2. Title of Job
3. Bid Number

SEND BIDS TO:
Four Rivers Sanitation Authority
3501 Kishwaukee Street
Rockford, IL 61109

BIDS WILL NOT BE ACCEPTED BY FAX OR EMAIL.

The Illinois Department of Human Rights registration number must be provided with the bid on the bid opening due date.

Proposal results are available after contracts are awarded at the Regular Meeting of the Board of Trustees, held on the fourth Monday of the month. Please call 815-387-7425 or visit fourrivers.illinois.gov

FOR REVIEW PURPOSES ONLY

SECTION I
NOTICE

INVITATION TO BID #22-204
MANHOLE FRAMES & LIDS
MAY 1, 2022 – APRIL 30, 2023

FOR REVIEW PURPOSES ONLY

I
NOTICE

INVITATION TO BID #22-204
MANHOLE FRAMES & LIDS
MAY 1, 2022 – APRIL 30, 2023

The Four Rivers Sanitation Authority will receive sealed, signed bids for **Manhole Frames & Lids** at the Authority's offices, 3501 Kishwaukee Street, until 2:00 p.m., March 4, 2022. The bid opening will be in-person, and will also be available via computer or phone by connecting as follows:

Meeting link: https://meet.goto.com/715151141

Join by phone: United States: +1 (872) 240-3311

Access Code: 715-151-141

The scope of this project involves the purchase of Neenah R-1670 self-sealing, non-rocking manhole frames and lids (or equivalent); Neenah R-1670 self-sealing, non-rocking, heavy-duty lids (or equivalent); Neenah R-1647-A low-profile, self-sealing, non-rocking, heavy-duty frames and lids (or equivalent); Neenah R-1772 self-sealing, heavy-duty lids (or equivalent); Neenah R-1915J self-sealing, heavy-duty frames and lids (or equivalent) with three (3) equidistant bolt holes in flanges on 30" diameter bolt circle for ½" anchor bolts; Neenah R-1973-1 riser casing and lid (or equivalent), as specified in the Four Rivers Sanitation Authority *General Provisions and Technical Specifications for Sanitary Sewer Construction.*

Copies of the Invitation to Bid for review purposes only are available through the Four Rivers Sanitation Authority web site, fourrivers.illinois.gov. Bid documents for submittal are available by contacting Procurement at MRoach@fourrivers.illinois.gov or (815) 387-7425.

Request for information related to this bid should be directed to Terry Stoll, Collection Systems Maintenance Division Manager of the Four Rivers Sanitation Authority, 3501 Kishwaukee St., Rockford, IL, 61109; telephone 815-387-7588.

No bid shall be withdrawn after the opening of bids without consent of the Four Rivers Sanitation Authority for a period of 60 days after the scheduled time of receiving bids.

The Four Rivers Sanitation Authority reserves the right to reject any or all bids, or any part thereof, or to accept any or all bids, or any part thereof, or to waive any formalities in any bids, deemed in the best interest of the Four Rivers Sanitation Authority.

The Authority will confirm any award decision in writing, to the successful bidder.

Julia Scott-Valdez

Julia Scott-Valdez
Director of Management Services
Four Rivers Sanitation Authority

FOR REVIEW PURPOSES ONLY

SECTION II
GENERAL SPECIFICATIONS & INSTRUCTIONS

INVITATION TO BID #22-204
MANHOLE FRAMES & LIDS
MAY 1, 2022 – APRIL 30, 2023

FOR REVIEW PURPOSES ONLY

II
GENERAL SPECIFICATIONS & INSTRUCTIONS

INVITATION TO BID #22-204
MANHOLE FRAMES & LIDS
MAY 1, 2022 – APRIL 30, 2023

2.1 Bid Preparation

Where applicable, bidder shall submit their bid on the forms the Authority provides in this document. **The bidder shall complete all applicable blanks**. They may submit additional information as they believe necessary on their stationery, under signature of the authorized representative who completes this document's forms.

If this Invitation to Bid contains inconsistencies between sections, Section III - Detailed Specifications shall supersede Section II - General Specifications, which shall supersede Section I - Notice. **No warranty is made or implied as to information contained in these specifications.**

An authorized officer or individual must sign the bid. Authorized signature must be the individual owner of a proprietorship, a general partner of a partnership, or the corporation officer who is authorized to sign for a firm and whose title is affixed.

All prices and notations shall be in ink or typewritten. The bidder may cross out mistakes and type corrections adjacent to the point of error. The person who signs the bid shall initial such corrections, in ink. **If the Authority finds a bidder's entry to be illegible, it may, at its sole discretion, reject the bid.**

2.2 Submission of Bids

The Authority **will not** receive bids in electronic format or by facsimile. The bidder shall return their bid in a sealed envelope, clearly marked as **ITB #22-204 Manhole Frames & Lids. The Authority cannot ensure that the sealed bid will not be prematurely opened if the bidder does not clearly identify their bid envelope.**

Bids should be addressed to:

Four Rivers Sanitation Authority
3501 Kishwaukee Street
Rockford, IL 61109

If the bidder chooses to hand-deliver their bid, they shall deposit it with the Graceffa Administration Building main entrance receptionist, 3501 Kishwaukee Street, Rockford, IL 61109 between the hours of 8:00 A.M. and 4:30 P.M.

FOR REVIEW PURPOSES ONLY

2.3 Illinois Department of Human Rights Registration Number

All bidders inside and outside of Illinois must provide an Illinois Department of Human Rights Registration Number at the time bids are due. This number shall be written or typed on the line in the Fair Employment Affidavit of Compliance (included in this document). The following link may be used to access the website where the number can be obtained: https://www2.illinois.gov/dhr/PublicContracts/Pages/default.aspx

2.4 Taxes

The Authority is exempt, by law, from paying bidder Federal Excise Tax and Illinois Retailers' Occupational Tax. Therefore, the bidder shall exclude those taxes from their bid. The Authority's tax exemption number is E9992-3696. The bidder shall include all applicable taxes in their bid price.

2.5 Withdrawal of Bids

At any time prior to the scheduled bid opening, the bidder may withdraw their bid. In order to do so, they shall submit a written request to the Director of Management Services.

2.6 Acceptance of Bid

The Authority may reject all or part of any or all bids, for any reason. The Authority may accept all or part of any bid or waive any bidding formalities if it decides such action is in the Authority's best interest.

The Authority will only consider bids that conform to the intent of this document. The Authority will reject bids that contain one or more exceptions if the Authority determines that non-conforming bids deviate from the intent of these specifications. The Authority's decision shall be final, and the Authority's procurement procedures contain no appeal provision.

2.7 Laws and Regulations

The bidder who is awarded the contract shall comply with all laws of the United States of America, the State of Illinois, and all lawful regulations of the Four Rivers Sanitation Authority and the respective cities and villages in which the professional service, material or equipment supplied is to be performed respecting labor and compensation and all other statutes, ordinances, rules and regulations applicable and having the force of the law.

A. Illinois Regulations

1. **Prevailing Wage**. All Contracts for the Construction of Public Works are subject to the Illinois Prevailing Wage Act (820 ILCS 130/1-12). The undersigned, as Bidder, declares they will comply with prevailing wages in accordance with the Illinois Department of Labor Standards. The State of Illinois requires contractors and subcontractors on public works projects (including Four Rivers Sanitation Authority) to submit certified payroll records on a monthly basis, along with a statement affirming that such records are true and accurate, that the wages paid to each worker are not

FOR REVIEW PURPOSES ONLY

less than the required prevailing rate and that the contractor is aware that filing false records is a Class B Misdemeanor.

Transcripts of certified payroll shall be filed using the IDOL portal at https://www2.illinois.gov/idol/Laws-Rules/CONMED/Pages/prevailing-wage-act.aspx

2. **Public Act 83-1472**. Article 2 of Public Act 83-1472 provides that Illinois residents be employed on Illinois public works projects, provided there has been a period of excessive unemployment (5%) in the State of Illinois as defined in the Act; and, further, that Illinois workers are available and capable of performing the particular type of work involved.

B. Steel Products Procurement Act. Public Act 83-1030 entitled "Steel Products Procurement Act" requires that steel products used or supplied in performance of this contract or subcontract shall be manufactured or produced in the United States with three exceptions.

The provisions of this Section shall not apply:

1. Where the contract involves an expenditure of less than $500.
2. Where the executive head of the public agency certifies in writing that (a) the specified products are not manufactured or produced in the United States in sufficient quantities to meet the agency's requirements, or (b) obtaining the specified products, manufactured or produced in the United States would increase the cost of the contract by more than 10%.
3. When its application is not in the public interest.

2.8 Terms

A. Payments to the Successful Bidder. If the Authority receives an acceptable invoice for conforming materials or service prior to the fifth day of the month, the Authority shall issue payment before the fifth day of the succeeding month. If received on or after the fifth day of the month, payment will be issued the following month.

B. Default. In case of default, the Authority will procure the materials or service described in this Invitation to Bid from other sources. The Authority shall hold the defaulting successful bidder responsible for any excess cost incurred. The defaulting successful bidder shall make such payment no more than 60 calendar days after the Authority notifies them, in writing, of such an occurrence.

1. Delivery Hours. Unless otherwise specified, all items must be delivered to: Four Rivers Sanitation Authority, 4850 Torque Road, Loves Park, Illinois, Monday through Friday, between the hours of 7:30 A.M. and 3:00 P.M., excluding holidays.

In the unlikely event that the Authority is picketed by its employees or by a third party, or if any labor-management dispute between the Authority and its employees or third parties becomes known to the successful bidder, then in such event and during the course of any

FOR REVIEW PURPOSES ONLY

such picketing or labor-management dispute, the successful bidder shall continue to carry out the terms and conditions of this contract as if such pickets were not present or such labor-management dispute did not exist.

Time of delivery is part of the Authority's consideration of each bid.

2. F.O.B. Point and Shipping Charges. All prices shall be quoted F.O.B. destination, Four Rivers Sanitation Authority, 4850 Torque Road, Loves Park, Illinois, 61111. All shipping, handling and freight charges must be included in the bid amount.

E. Use of Authority Name Prohibited. In the absence of the Authority's written permission, the successful bidder shall not use the Authority's name in any form or medium of public advertising.

2.9 Quantities Estimated Only

The estimated quantities of the various items of work and materials, as set forth in the bid form, is approximate only and is given solely to be used as a uniform basis for the comparison of bids. The quantities actually required to complete the contract work may be less or more than so estimated, and if awarded a contract for the work specified, the Contractor further agrees that they will not make any claim for damages or for loss of profits or for an extension of time because of a difference between the quantities of the various classes of work assumed for comparison of bids and quantities of work performed.

2.10 Investigation

It shall be the responsibility of the bidder to make any and all investigations necessary to become thoroughly informed of what is required and specified in the bid document. No plea of ignorance by the bidder of conditions that exist or that may hereafter exist as a result of failure or omission on the part of the bidder to make necessary examinations and investigations will be accepted on a basis for varying the requirements of the Authority or the compensation of the bidder.

2.11 Addenda

If the Authority issues written addenda, such addenda shall become part of the contract documents. Not less than 3 business days prior to the bid opening date, the Authority will post the addenda on its website at fourrivers.illinois.gov, and distribute the addenda via email to each recipient of the specifications, at either the:

- Email address to which the Authority emailed the original bid document; or
- Corrected email address prospective bidder furnished

A bidder that does not receive the Authority's addenda, and who has previously submitted a bid, shall not be relieved from any obligation in the bid they submitted.

2.12 Contract Form

No more than 10 business days following the contract award, the successful bidder shall submit a completed Contract Form to the Authority's Director of Management Services. The Contract Form is part of this Invitation to Bid. If the successful bidder fails to complete the Contract Form within the specified time, they shall be in material default.

FOR REVIEW PURPOSES ONLY

2.13 Contract Termination

A. Bidder's Unacceptable Performance. If the successful bidder fails to perform services or provide materials in conformity with this Invitation to Bid, the Authority shall notify them in writing. If the successful bidder fails to correct the performance deficiency to the Authority's satisfaction within five working days after they receive the Authority's notice, they shall be in default. If the same performance deficiency recurs despite the Authority's notification and the successful bidder's temporary correction, the successful bidder shall likewise be in default. The Authority may, at its sole discretion, terminate the **Manhole Frames & Lids** contract with the defaulting successful bidder, and remedy the matter under provisions set forth in Section 2.8B of this Invitation to Bid.

B. Authority's Action Following Contract Termination. If the contract is terminated, the Authority may, at its sole option:

1. request new **Manhole Frames & Lids** bids or
2. designate the next-low bidder to perform the **Manhole Frames & Lids** contract, provided that said next-low bidder agrees to their original bid terms.

The Authority may repeat this option until it obtains an acceptable **Manhole Frames & Lids** contract.

2.14 "No Bid" Response Form

In the event you elect not to bid, please fill out and return the attached "No Bid" form.

2.15 Indemnification Clause

Successful respondent/contractor shall protect, indemnify, hold and save harmless and defend the Authority, its officers, officials, employees, volunteers, and agents against any and all claims, costs, causes, actions and expenses, including but not limited to attorney's fees incurred by reason of a lawsuit or claim for compensation arising in favor of any person, including the employees, officers, independent contractors, or subcontractors of the successful respondent/ contractor or Authority, on account of personal injuries or death, or damages to property occurring, growing out of, incident to, or resulting directly or indirectly from the performance by the successful respondent/contractor or subcontractor, whether such loss, damage, injury, or liability is contributed to by the negligence of the Authority or by premises themselves or any equipment thereon whether latent or patent, or from other causes whatsoever, except that the successful respondent/contractor shall have no liability for damages or the costs incident thereto caused by the sole negligence of the Authority.

The indemnification shall not be limited by a limitation on amount or type of damages payable by or for the successful respondent/contractor or its subcontractor under any employee benefits act including, but not limited, to the Workers' Compensation Act.

No inspection by the Authority, its employees, or agents shall be deemed a waiver by the Authority of full compliance with the requirements of the Contract. This indemnification shall not be limited by the required minimum insurance coverage in the Contract.

2.16 Force Majeure

The obligations of either the Authority or the successful bidder shall be suspended during the time as such party is prevented from complying therewith in whole or in part because

FOR REVIEW PURPOSES ONLY

of any cause, except financial, beyond the reasonable control of such party. In the event of either the Authority or the successful bidder being rendered unable wholly or in part by force majeure to carry out its obligations under the contract, other than to make payments due, it is agreed that on such party giving notice and full particulars of such force majeure in writing to the other party as soon as possible after the occurrence of the cause relied on, then the obligations of the parties insofar as they are affected by such force majeure shall be suspended during the continuance of any inability so caused but for no longer period, and such cause shall as far as possible be remedied with all reasonable dispatch.

2.17 Insurance

A. The successful respondent/contractor, for the duration of the contract, shall maintain the following:

General Liability: $1,000,000 combined single limit per occurrence for bodily injury, personal injury and property damage. If Commercial General Liability Insurance or other form with a general aggregate limit is used, either the general aggregate limit shall apply separately to this project or the general aggregate limit shall be twice the required occurrence limit.

Auto Liability: $1,000,000 combined single limit per accident for bodily injury and property damage including coverages for owned, hired or non-owned vehicles, as applicable.

Workers' Compensation and Employers' Liability: Workers' Compensation limits as required by statute and Employers' Liability limits of $500,000 per accident and $500,000 per disease.

Umbrella: $2,000,000 per occurrence/aggregate.

The policies shall contain, or be endorsed to afford Contractual Liability coverages for the following provisions in the General Liability and Automobile Liability coverages:

1. The Authority, its officers, officials, employees, and volunteers shall be covered as additional insureds as respects liability arising out of activities performed by or on insured's general supervision of the successful respondent/contractor, products and completed operations of the successful respondent/contractor, premises owned, occupied or used by the successful respondent/contractor, or automobiles owned, leased, hired, or borrowed by the successful respondent/contractor. The coverage shall contain no special limitations on the scope of protection afforded to the Authority, its officers, officials, employees, volunteers, or agents.

2. The successful bidder's/contractor's insurance coverage shall be primary insurance as respects the Authority, its officers, officials, employees, volunteers, and agents. Any insurance or self-insurance maintained by the Authority, its officers, official employees, volunteers, or agents shall be in excess of the successful respondent's/contractor's insurance and shall not contribute with it.

3. Any failure to comply with reporting provisions of the policies shall not affect coverage provided to the Authority, its officers, officials, employees, volunteers, or agents.

The successful respondent's/contractor's insurance shall apply separately to each

FOR REVIEW PURPOSES ONLY

insured against whom claim is made or suit is brought, except with respect to the limits of the insurer's liability.

B. Proof of Insurance – Certificate of Insurance. No more than 10 calendar days subsequent to the Authority's issuance of an award letter and no later than 30 days before commencement to work, the successful respondent/contractor shall provide documentation including a Certificate of Insurance, and primary, non-contributory additional insured endorsements for general and auto liability to prove that it has obtained all required insurance and bonds. The Authority shall be the sole judge as to the acceptability of any such proof.

C. Correction of Successful Bidder's Insurance Deficiencies. If the Authority determines that the successful bidder's insurance or documentation does not conform to these specifications, the Authority shall inform said bidder of the non-conformity. If said bidder fails to provide conforming insurance or documentation within five calendar days of the Authority's notice, they shall be in default.

D. Best's Ratings.

1. Alphabetical Rating. For purposes of this Request for Bids, "insurer" shall mean any surety, insurance carrier, or other organization which proposes to provide an insurance policy or bond for the successful respondent/contractor. No insurer or surety rated lower than "A-," **Excellent**, in the current Best's Key Rating Guide shall be acceptable to the Authority.

2. Financial Size Rating. Provided an insurer's alphabetical rating is satisfactory, the Authority will examine said insurer's financial size rating.

a) If Best classifies the insurer XII or larger, said insurer shall be acceptable to the Authority.

b) If Best classifies the insurer as smaller than XII, but larger than VI, said **insurer shall be submitted to the Authority's Director of Management Services and/or the Authority's insurance consultant for review.**

Financial Size ratings less than VII are not acceptable and will disqualify the respondent/contractor.

E. Suitability of Insurance. The Authority shall be the sole judge of whether an insurer's rating is satisfactory. The Authority's decision shall be final and the Authority's bidding procedures contain no appeal provision.

2.18 Responsive/Responsible Bidder

A. Evaluation of Responsiveness. The responsiveness of bidders will be judged on the basis of the completeness of the bid submitted. To be responsive, a Bid must be submitted on the forms provided as part of the Bid Documents and comply with all the requirements of the Invitation to Bid.

B. Evaluation of Responsibility. To be judged as responsible, the bidder shall:

1. Have adequate financial resources for performance, the necessary experience, organization, technical qualifications, and facilities, or a firm commitment to obtain such by subcontracts;

FOR REVIEW PURPOSES ONLY

2. Be able to comply with the required completion schedule for the project;
3. Have a satisfactory record of integrity, judgment, and performance, including, in particular, any prior performance on contracts from the Authority;
4. Have an adequate financial management system and audit procedures, that provide efficient and effective accountability and control of all property, funds, and assets;
5. Conform to the civil rights, equal employment opportunity and labor law requirements of the Bid Documents.

FOR REVIEW PURPOSES ONLY

SECTION III
DETAILED SPECIFICATIONS

INVITATION TO BID #22-204
MANHOLE FRAMES & LIDS
MAY 1, 2022 – APRIL 30, 2023

FOR REVIEW PURPOSES ONLY

III
DETAILED SPECIFICATIONS

INVITATION TO BID #22-204
MANHOLE FRAMES & LIDS
MAY 1, 2022 – APRIL 30, 2023

3.1 Scope and Intent

It is the intent of this document to specify minimum requirements that the successful bidder must meet in order for the Authority to obtain manhole frames and lids that meet the requirements of the Four Rivers Sanitation Authority.

3.2 Minimum Requirements

A. General

All frames and lids shall be gray iron as manufactured by the Neenah Foundry Company or equivalent. Frames and lids shall be of uniform quality, free of blowholes, shrinkage, distortion or other defects. They shall be smooth and thoroughly cleaned by shot-blasting. All gray iron shall conform to ASTM A48–83 Class 35B.

All frames and lids shall be manufactured true to pattern; all component parts shall fit together in a satisfactory manner. All frames & lids shall be unpainted. Frames & lids shall have continuously machined bearing surfaces to prevent rocking. As-cast dimensions may vary ±1/16" per foot. Deviation from published weight shall not exceed ±5%.

All frames and lids shall be heavy duty, suitable for highway traffic or H20 wheel loads of 16,000 lbs.

B. Manhole Lids

All manhole lids shall be the self–sealing type. All gaskets shall be of a material acceptable to the Four Rivers Sanitation Authority and shall be pre–installed and glued in place. The gasket shall be continuous and fit into a machined dovetail groove.

All lids shall have concealed pick holes of an acceptable design that do not allow water to enter the lid.

All pick holes shall be designed per the attached drawing, or Authority approved equivalent.

All lids shall have Four Rivers Sanitation Authority logo and lettering in the center of the lid per the attached drawing.

When specified, lids shall be non–rocking with a pointed lug and graduated rack. Each tooth in the rack shall vary diameter of the opening by 1/32".

Where required, cap screws or other hardware shall be stainless steel, with the lid designed such that they are countersunk.

C. Submittals

Manufacturer's shop drawings shall be submitted to the Four Rivers Sanitation Authority prior to manufacturing or shipping of the frames & lids to the Four Rivers Sanitation Authority.

FOR REVIEW PURPOSES ONLY

The Four Rivers Sanitation Authority shall retain the right to reject frames and lids not conforming to this bid document and/or approved shop drawings.

3.3 Fees

All bids shall include all fees associated with the purchase including any shipping, delivery or doc fees.

3.4 Warranty

Manufacturers shall unconditionally warrant their products for a period of two (2) years commencing on the date of delivery. Supplier shall, upon written notice, furnish labor and new materials to immediately replace and make good, without expense to the Four Rivers Sanitation Authority, faulty materials and equipment. Any such replacement shall likewise be covered by the same warranty period from subsequent delivery date.

All replacement parts shall be shipped F.O.B. to the Four Rivers Sanitation Authority north maintenance facility, located at 4850 Torque Drive, Loves Park, IL 61111, within three (3) weeks of notification and shall be furnished at no additional cost to the Four Rivers Sanitation Authority.

3.5 Payments to the Successful Bidder

Section 2.8A of this Invitation to Bid contains the Authority's general payment requirements.

3.6 Questions

Interested parties may direct questions concerning this Invitation to Bid to Terry Stoll, Collection Systems Maintenance Division Manager; 815-387-7588. The Authority will not interpret specifications for individual bidders. If the Authority determines that the specifications need to be clarified or revised, it will issue an addendum to all prospective bidders.

The Authority will not interpret specifications for individual bidders. If the Authority determines that the specifications need to be clarified or revised, it will issue an addendum to all prospective bidders.

FOR REVIEW PURPOSES ONLY

SECTION IV
BID FORM

INVITATION TO BID #22-204
MANHOLE FRAMES & LIDS
MAY 1, 2022 – APRIL 30, 2023

FOR REVIEW PURPOSES ONLY

IV
BID FORM

INVITATION TO BID #22-204
MANHOLE FRAMES & LIDS
MAY 1, 2022 – APRIL 30, 2023

Failure to complete this form will result in disqualification of Vendor's bid or proposal.

To: BOARD OF TRUSTEES
FOUR RIVERS
SANITATION AUTHORITY
3501 KISHWAUKEE ST.
ROCKFORD, ILLINOIS 61109

From: _____
(Individual, Partnership or Corporation)

_____
(Address of Individual, Partnership or Corporation)

Trustees:

I (We) the undersigned hereby propose to furnish the **Manhole Frames & Lids** in compliance with the attached Introduction, General Specifications and Instructions, Detailed Specifications, Bid Form, Fair Employment Practices Affidavit of Compliance Form, Forms of Affidavit, and Contract Form.

The Undersigned also affirms and declares:

A. That they have examined and are familiar with all the related contract documents and found that they are accurate and complete and are approved by the undersigned.
B. That they have carefully examined the scope of the required service, materials or equipment supplied, and that, from their own investigation, have satisfied themselves as to the nature and location of the delivery point, the character, quality and quantity of materials, and the kind and extent of equipment and other facilities needed for the performance of the service and provision of the materials, the general and local conditions and all difficulties to be encountered, and all other items which may, in any way, affect the services, materials, or equipment or their performance.
C. That this bid is made without any understanding, contract or connection with any other person, partnership, or corporation making a bid for the same purposes, and is in all respects fair and without collusion or fraud; and that they are not barred from submitting a bid as a result of a bid-rigging or bid-rotating conviction.
D. All goods and services provided in response to this request will be produced in compliance with all applicable requirements of Sections 6, 7 and 12 of the Fair Labor Standards Act, as amended, and of regulations and orders of the United States Department of Labor issued under Section 14 thereof.
E. The firm which I (we) represent complies with all applicable requirements of the Americans with Disabilities Act (ADA), the Occupational Safety and Health Act (OSHA), rules and regulations of the US Department of Transportation (DOT), and the Federal Drug Free Work Place Act. If said firm is awarded a contract to provide the Authority's **Manhole Frames & Lids,** it will:

FOR REVIEW PURPOSES ONLY

1. complete all OSHA, ADA, and DOT required supervisory, employee and customer training,
2. document compliance as required,
3. ensure that persons in safety-sensitive positions associated with loading, transportation, and delivery of the merchandise or service detailed in these specifications are subject to all required drug and alcohol testing and are properly licensed,
4. prepare and make available all required information and documentation, and
5. hold harmless and indemnify the Authority and the Authority's representatives as defined in Section 2.15 from all:
    a. Suits, claims, or actions;
    b. Costs, either for defense (including but not limited to reasonable attorney's fees and expert witness fees) or for settlements, and;
    c. Damages of any kind (including but not limited to fines, actual, punitive, and compensatory damages) relating in any way to or arising out of the ADA or the OSHA, to which said firm is exposed or which it incurs in the execution of the contract.

F. The firm which I (we) represent has adopted and promulgated written sexual harassment policies that include, at a minimum, the following information:

1. the illegality of sexual harassment;
2. the definition of sexual harassment under Illinois State Law;
3. a description of sexual harassment, utilizing examples;
4. my (our) organization's internal complaint process including penalties;
5. the legal recourse, investigative and complaint process available through the Illinois Department of Human Rights and the Illinois Human Rights Commission;
6. directions on how to contact the Department and the Commission; and
7. protection against retaliation as provided by Section 6-101 of Illinois Human Rights Act.

Upon request, my (our) organization will provide the Illinois Department of Human Rights with the information described in F1 through F7 above.

In submitting this proposal, I (we) understand that the Authority may reject part or all of any and all bids. I (we) agree that I (we) shall not withdraw this bid for a period of 60 calendar days following the scheduled bid opening. I (we) have carefully examined the nature of the service, materials, and equipment. The cost of all the service, materials, and equipment necessary to complete this contract is given in this bid.

The selected proposer shall enter into a Contract with the Authority to complete the Project in a form substantially similar to the Contract attached hereto. The Contract shall be executed by the Contractor/Vendor and returned, together with the Insurance Documents and Performance Bond (if applicable) within ten (10) calendar days after it has been mailed to the Contractor. Two copies of the contract shall be executed by the Contractor. One fully executed copy will be returned to the Contractor. See Section VII for a sample copy of the agreement.

FOR REVIEW PURPOSES ONLY

Item No.	Quantity And Unit	Descriptive Title	Unit Price (In Figures)	Total Price (In Figures)
1	350 Ea.	Neenah R-1670 self-sealing, non-rocking, heavy-duty frames and lids (or equivalent)	$	$
2	200 Ea.	Neenah R-1670 self-sealing, non-rocking, heavy-duty lids (or equivalent)	$	$
3	20 Ea.	Neenah R-1647-A low-profile, self-sealing, non-rocking, heavy-duty frames and lids (or equivalent)	$	$
4	50 Ea.	Neenah R-1772 Self-sealing, heavy-duty lids (or equivalent)	$	$
5	15 Ea.	Neenah R-1915J self-sealing, heavy-duty frames and lids (or equivalent) with three (3) equidistant bolt holes in flanges on 30" diameter bolt circle for ½" anchor bolts	$	$
6	20 Ea.	Neenah R-1973-1 riser casing and lid (or equivalent)	$	$
			Total Bid Price: (In Figures)	$

In conformity with the requirements of the Detailed Specifications, I have submitted attached to this request for bids and incorporated in my bid by reference prices and part descriptions sufficient for the Authority to evaluate my organization's bid.

The undersigned acknowledges that Addendum numbers ___, _____, _____were received, and realizes that all Addenda are considered part of the Contract.

Date: _____

By signing this bid, I/we, the bidder(s), agree to the terms of the bid, bid requirements, addenda, and contract.

Bidder: _____By: _____
(Print Name of Firm) (Authorized Rep's Signature)

_____ _____
(Print Street Address) (Print Rep's Name)

_____ _____
(Print City, State, Zip) (Print Rep's Title)

_____ _____
(Area Code and Phone Number) (Email Address)

NOTE: The Four Rivers Sanitation Authority, a Governmental Unit, pays neither Federal Excise Tax nor Illinois Retailers' Occupational Tax. The bidder shall exclude those taxes from their bid.

FOR REVIEW PURPOSES ONLY

"NO BID" RESPONSE
TO
INVITATION TO BID

If your firm is unable to submit a bid at this time, would you please provide the information requested in the space provided below and return to:

Four Rivers Sanitation Authority
3501 Kishwaukee Street
Rockford, IL 61109

Responses can also be emailed to:

mroach@fourrivers.illinois.gov

We have received Invitation to Bid: **Manhole Frames & Lids, May 1, 2022 – April 30, 2023** opening at 2:00 p.m., March 4, 2022.

Reason for not bidding: _____

_____

_____

_____

BY: _____
Signature

_____
Name & Title, Typed or Printed

_____
Company Name

FOR REVIEW PURPOSES ONLY

SECTION V
FAIR EMPLOYMENT AFFIDAVIT OF COMPLIANCE

INVITATION TO BID #22-204
MANHOLE FRAMES & LIDS
MAY 1, 2022 – APRIL 30, 2023

FOR REVIEW PURPOSES ONLY

V

FAIR EMPLOYMENT PRACTICES AFFIDAVIT OF COMPLIANCE

Failure to complete this form will result in disqualification of Vendor's bid or proposal.

MANHOLE FRAMES & LIDS MAY 1, 2022 – APRIL 30, 2023

NOTE: THE BIDDER MUST EXECUTE THIS AFFIDAVIT AND SUBMIT IT WITH ITS SIGNED BID. THE FOUR RIVERS SANITATION AUTHORITY CANNOT ACCEPT ANY BID WHICH DOES NOT CONTAIN THIS AFFIDAVIT

_____, being first duly sworn, deposes and says that:
(Name of person making affidavit)

They are: _____ of _____
(Officer's Title) (Company Name)

that said company is and "Equal Opportunity Employer" as defined by Section 2000(e) of Chapter 21, Title 42 of the United States Code annotated and Federal Executive Orders #11375 which are incorporated herein by reference;

and that said company will comply with any and all requirements of Title 44 Admin. Code 750. APPENDIX A – Equal Opportunity Clause, Rules and Regulations, Illinois Department of Human Rights, which read as follows:

"In the event of the contractor's non-compliance with the provisions of this Equal Employment Opportunity Clause, the Illinois Human Rights Act or the Rules and Regulations of the Illinois Department of Human Rights ("Department"), the contractor may be declared ineligible for future contracts or subcontracts with the State of Illinois or any of its political subdivisions or municipal corporations, and the contract may be cancelled or voided in whole or in part, and such other sanctions or penalties may be imposed or remedies invoked as provided by statute or regulation. During the performance to this contract, the contractor agrees as follows:

1. That it will not discriminate against any employee or applicant for employment because of race, color, religion, sex, sexual orientation, marital status, national origin or ancestry, citizen status, age, physical or mental handicap unrelated to ability, military status or an unfavorable discharge from military service; and further that it will examine all job classifications to determine if minority persons or women are underutilized and will take appropriate affirmative action to rectify any such underutilization.
2. That, if he or she hires additional employees in order to perform this contract or any portion of this contract, he or she will determine the availability (in accordance with the Department's Rules and Regulations) of minorities and women in the areas from which he or she may reasonably recruit and he or she will hire for each job classification for which employees are hired in a way that minorities and women are not underutilized.
3. That, in all solicitations or advertisements for employees placed by him or her or on his or her behalf, he or she will state that all applicants will be afforded equal opportunity without discrimination because of race, color, religion, sex, sexual orientation, marital status, national origin or ancestry, citizenship status, age, physical or mental handicap unrelated to ability, sexual orientation, military status or an unfavorable discharge from military service.
4. That he or she will send to each labor organization or representative of workers with which he or she has or is bound by a collective bargaining or other agreement or understanding, a notice advising such labor organization or representative of the contractor's obligations under the Illinois Human Rights Act and the Department's Rules and Regulations. If any labor organization or representative fails or refuses to cooperate with the contractor in his or her efforts to comply with such Act and Rules and Regulations, the contractor will promptly so notify the Department and the contracting agency and will recruit employees from other sources when necessary to fulfill its obligations under the contract.
5. That he or she will submit reports as required by the Department's Rules and Regulations, furnish all relevant information as may from time to time be requested by the Department or the contracting agency, and in all respects comply with the Illinois Human Rights Act and the Departments Rules and Regulations.
6. That he or she will permit access to all relevant books, records, accounts and work sites by personnel of the contracting agency and the Department for purposes of investigation to ascertain compliance with the Illinois Human Rights Act and the Department's Rules and Regulations.
7. That he or she will include verbatim or by reference the provisions of this clause in every subcontract awarded under which any portion of the contract obligations are undertaken or assumed, so that the provisions will be binding upon the subcontractor. In the same manner as with other provisions of this contract, the contractor will be liable for compliance with applicable provisions of this clause by such subcontractors; and further it will promptly notify the contracting agency and the Department in the event any subcontractor fails or refuses to comply with the provisions. In addition, the contractor will not utilize any subcontractor declared by the Illinois Human Rights Commission to be ineligible for contacts or subcontracts with the State of Illinois or any of its political subdivisions or municipal corporations.

(Source: Amended at 32 I11. Reg. 16484, effective September 23, 2008)"

IL Dept of Human Rights Registration No.: _____ Expiration Date: _____

Signature_____

Subscribed and sworn to before me this _____ day of _____, 20_____.

Notary Public _____

FOR REVIEW PURPOSES ONLY

SECTION VI
FORMS OF AFFIDAVIT

INVITATION TO BID #22-204
MANHOLE FRAMES & LIDS
MAY 1, 2022 – APRIL 30, 2023

FOR REVIEW PURPOSES ONLY

VI
FORMS OF AFFIDAVIT

INVITATION TO BID #22-204
MANHOLE FRAMES & LIDS MAY 1, 2022 – APRIL 30, 2023

Failure to complete this form will result in disqualification of Vendor's bid or proposal.

Bidder City: _____ Bidder County: _____ Bidder State: _____

This Section for Sole Proprietorship:

I, _____ (name), being duly sworn, depose and say that the organization I represent is a sole proprietorship, and that I am the person described in and who executed the foregoing bid and that the several matters therein stated are in all respects true.

Signature _____

This Section for Partnership:

I, _____ (name), being duly sworn, depose and say that I am a member of _____ (partnership name), the firm described in and which executed the foregoing bid; that I duly subscribed the name of the firm thereunto on behalf of the firm; and that the several matters therein stated are in all respects true.

Signature _____

This Section for Corporation:

We, _____ (representative who signed the Bid Form), and _____ (other corporate officer), being duly sworn, depose and say that we reside in the cities of _____ and _____, respectively, and that we are the _____ (representative's title) and the _____ (other corporate officer's title), respectively, of _____ _____ (corporation name), the firm described in and which executed the foregoing instrument; that we are authorized to complete this form and to enter into this contract on behalf of said corporation; that we have signed our names thereto by like order; and that we have knowledge of the several matters therein stated and they are in all respects true.

_____ _____
(representative's signature) (other corporate officer's signature)

This Section for a Limited Liability Corporation:

I, _____ (name), being duly sworn, depose and say that I am a _____ (representative's title) of _____ (company name), the company described in and which executed the foregoing proposal; that I am authorized to complete this form and to enter into this contract on behalf of said company and have knowledge of the several matters therein stated and they are in all respects true.

Signature _____

Notarization (required for all successful bidders):

Subscribed and sworn to before me this _____ day of _____, 20_____.

Notary Public _____

County _____

My Commission Expires _____

FOR REVIEW PURPOSES ONLY

SECTION VII
CONTRACT SAMPLE

INVITATION TO BID #22-204
MANHOLE FRAMES & LIDS
MAY 1, 2022 – APRIL 30, 2023

FOR REVIEW PURPOSES ONLY

VII
CONTRACT
FOUR RIVERS SANITATION AUTHORITY
MANHOLE FRAMES & LIDS MAY 1, 2022 – APRIL 30, 2023

THIS CONTRACT, made and concluded this ____ day of _____, 20__, between the Four Rivers Sanitation Authority, Illinois, also known as "Authority," and _____ their executors, administrators, successors or assigns, known as "Contractor":

In consideration of the payments and contracts mentioned in the Bid attached hereto, to be made and performed by the Authority, the Contractor agrees with the Authority at their own proper cost and expense to do all the work, furnish all equipment, materials and all labor necessary to complete the work and furnish the merchandise in accordance with the specifications hereinafter described, and the Authority's requirements.

1. Scope

Both parties understand and agree that the Introduction, General Specifications and Instructions, Detailed Specifications, Bid Form, Fair Employment Practices Affidavit of Compliance Form, and Forms of Affidavit of the Invitation to Bid: **Manhole Frames & Lids**, all Addenda there to (if any), and any and all provisions required by law, are all essential documents of the contract, and are a part hereof, as if herein set out verbatim or as if attached, except for titles, subtitles, headings, table of contents and portions specifically excluded.

The Successful Bidder shall provide the Authority's **Manhole Frames & Lids** including delivery, at the bid price, and a 2-year unconditional warranty commencing on the date of delivery.

2. Contract Price

The Authority shall pay to the Contractor, and the Contractor shall accept, in full payment for the performance of this Contract, subject to any additions or deductions provided for hereby, in current funds, the total contract price of:

_____($_____).

The Contractor fully understands and agrees that their bid price, delivered F.O.B. 3333 Kishwaukee St., Rockford, IL will be the only basis for payment for the contract's duration, and that in the absence of changes to which the Authority and Contractor agree because of revisions to the scope of the **Manhole Frames & Lids**, this contract allows for no price increases.

The Authority shall make payments to the Contractor, in accordance with and subject to the provisions of Section 4 of this Contract.

FOR REVIEW PURPOSES ONLY
SAMPLE

3. Contract Execution

The Contractor shall:

A. Perform all services in a responsible manner, supplying only service, materials, or equipment that meets or exceeds the Authority's specifications;

B. Deliver the **Manhole Frames & Lids** in conformity with the specifications;

C. Sustain all loss or damage arising out of the nature of the work to be done, or from any unforeseen obstruction or difficulty which they may encounter in the prosecution of the work, or from the action of the elements;

D. Be responsible for all accidents they, their employees, or agents may incur in the contract's execution;

E. Hold the Authority and its representatives harmless from liability of any nature or kind on account of use of any copyrighted or un-copyrighted composition, secret process, patented or unpatented invention, article or appliance furnished or used under this Contract. The Contractor shall likewise hold harmless and indemnify the Authority and its representatives from all:

1. suits, claims, or actions,
2. costs, either for defense or for settlements, and
3. damages to which the Authority or its representatives might be exposed by reason of an injury or alleged injury, to the person or property of another:
   a. in the execution of the Contract, or
   b. from actions the Authority or its representatives take on the Contractor's behalf, except in cases where such suits, claims, actions, or costs are found to be based on the Authority's negligence. For purposes of this paragraph, "its representatives" means "the Four Rivers Sanitation Authority's trustees, employees, agents, assigns, and their heirs;"

F. Comply with all applicable requirements of the Americans with Disabilities Act (ADA), the Occupational Safety and Health Act (OSHA), rules and regulations of the US Department of Transportation (DOT), and the Federal Drug Free Work Place Act, and will:

1. complete all OSHA, ADA, and DOT required supervisory, employee and customer training,
2. document compliance as required,
3. ensure that persons in safety-sensitive positions associated with loading, transportation, and delivery of the merchandise or service detailed in these specifications are subject to all required drug and alcohol testing and are properly licensed,
4. prepare and make available all required information and documentation, and
5. hold harmless and indemnify the Authority and the Authority's representatives as defined in Section 2.15 from all:
   a. Suits, claims, or actions;
   b. Costs, either for defense (including but not limited to reasonable attorney's

FOR REVIEW PURPOSES ONLY
SAMPLE

fees and expert witness fees) or for settlements, and;

c. Damages of any kind (including but not limited to fines, actual, punitive, and compensatory damages) relating in any way to or arising out of the ADA or the OSHA, to which said firm is exposed or which it incurs in the execution of the contract.

G. Adopt and promulgate written sexual harassment policies that include, at a minimum, the following information:

1. the illegality of sexual harassment;
2. the definition of sexual harassment under Illinois State law;
3. a description of sexual harassment, utilizing examples;
4. Contractor's internal complaint process including penalties;
5. the legal recourse, investigative and complaint process available through the Illinois Department of Human Rights and the Illinois Human Rights Commission;
6. directions on how to contact the Department and the Commission; and
7. protection against retaliation as provided by Section 6-101 of Illinois Human Rights Act.

Upon request, Contractor will provide the Illinois Department of Human Rights with the information described in G1 through G7 above.

H. Maintain all specified insurance for the duration of the contract.

I. The Steel Products Procurement Act, Illinois Public Act 83-1030, requires that steel products used or supplied in performance of this Contract or subcontract shall be manufactured or produced in the United States with three exceptions, as explained in the Instructions to Bidders.

J. In the absence of the Authority's written permission, the Contractor shall not use the Authority's name in any form or medium of public advertising.

K. This Contract shall extend to and be binding upon the successors and assigns, and upon the heirs, administrators, executors, and legal representatives of the Contractor.

In consideration of and to induce the award of this Contract to them, the Contractor represents and warrants: that they are not in arrears to the Authority upon debt of the Contract and that they are not a defaulter, as surety, contractor or otherwise; that they are financially solvent and sufficiently experienced and competent to perform the work; that the work can be performed as called for by the Contract; that the facts stated in their proposal and the information given by them is true and correct in all respects, and that they are fully informed regarding all the conditions affecting the work to be done and labor and materials to be furnished for the completion of this Contract and that their information was secured by personal investigation and research.

If the Contractor defaults, the Authority may procure **Manhole Frames & Lids** described in this Invitation to Bid, from other sources. In such an event, the price the Authority pays shall constitute the prevailing market price at the time of such purchase

FOR REVIEW PURPOSES ONLY
SAMPLE

and the defaulting Contractor shall pay the Authority the difference between their bid price and the prevailing market price. The defaulting Contractor shall make such payment no more than 60 calendar-days after the Authority notifies them, in writing, of such an occurrence.

4. Payments to Contractor

If the Authority receives an acceptable invoice for conforming service prior to the fifth day of the month, the Authority shall issue payment before the fifth day of the succeeding month. If received on or after the fifth day of the month, payment will be issued the following month.

5. Subcontracts

No part of the work herein provided for shall be sublet or subcontracted without the express written consent of the Authority, and in no case shall consent relieve said Contractor from the obligation herein entered into, or change the terms of this Contract.

6. Contractor's Responsibility

This Contract shall extend to and be binding upon the successors and assigns, and upon the heirs, administrators, executors, and legal representatives of the Contractor.

7. Counterparts

This Agreement may be executed and recorded in counterparts, each of which shall be deemed an original and all of which, when taken together, shall constitute one and the same instrument. The Parties hereby acknowledge and agree that facsimile signatures or signatures transmitted by electronic mail in so-called “pdf” format shall be legal and binding and shall have the same full force and effect as if an original of this Agreement had been delivered. Each of the parties (a) intend to be bound by the signatures on any document sent by facsimile or electronic mail, (b) are aware that the other party will rely on such signatures, and (c) hereby waive any defenses to the enforcement of the terms of this Agreement based on the foregoing forms of signature.

8. Time

The Contractor agrees to all delivery schedules specified in the Invitation to Bid.

FOR REVIEW PURPOSES ONLY
SAMPLE

9. Seals

IN WITNESS WHEREOF, the parties have hereunto set their hands, and are duly authorized to enter into such contracts on behalf of their respective organizations.

_____
Name of Firm - Contractor

By _____
Authorized Signature

ATTEST:

By: _____

Its: _____

Four Rivers Sanitation Authority
Winnebago County, Illinois

By _____
Executive Director

ATTEST: _____
Director of Management Services

STATE OF ILLINOIS)
COUNTY OF WINNEBAGO)

On this ___ day of _____, 20_____ before me, a notary public within and for said County, personally appeared Timothy S. Hanson and Julia Scott-Valdez, to me personally known, who, being each by me duly sworn did say that they are respectively, the Executive Director and Director of Management Services of the Four Rivers Sanitation Authority, named in the foregoing instrument, and that said instrument was signed and sealed in behalf of the Authority, and said Executive Director and Director of Management Services acknowledge said instrument to be the free act and deed of said Authority.

(SEAL)

_____
Notary Public

FOR REVIEW PURPOSES ONLY
SAMPLE

DRAWING CONTROL: CONTROLLED DRAWINGS ON NFCO SERVER. ALL OTHER COPIES, ELECTRONIC OR PRINTED ARE FOR REFERENCE ONLY

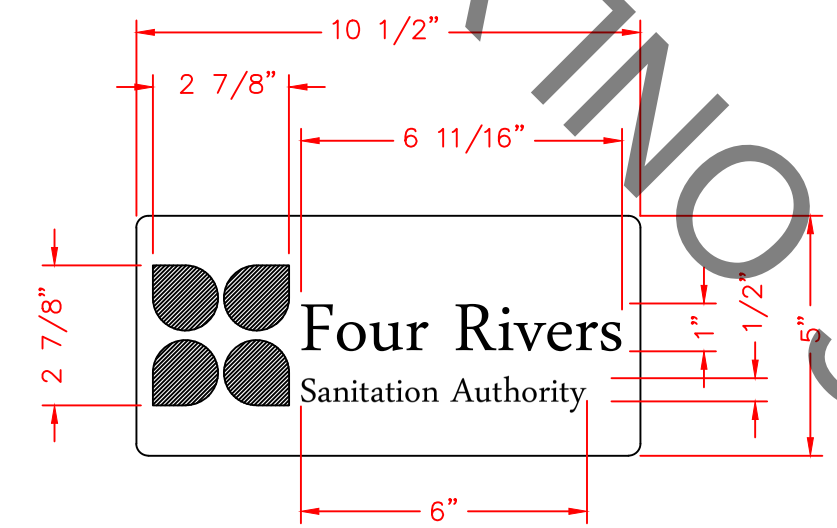

LOGO DETAIL
SCALE = 1/4

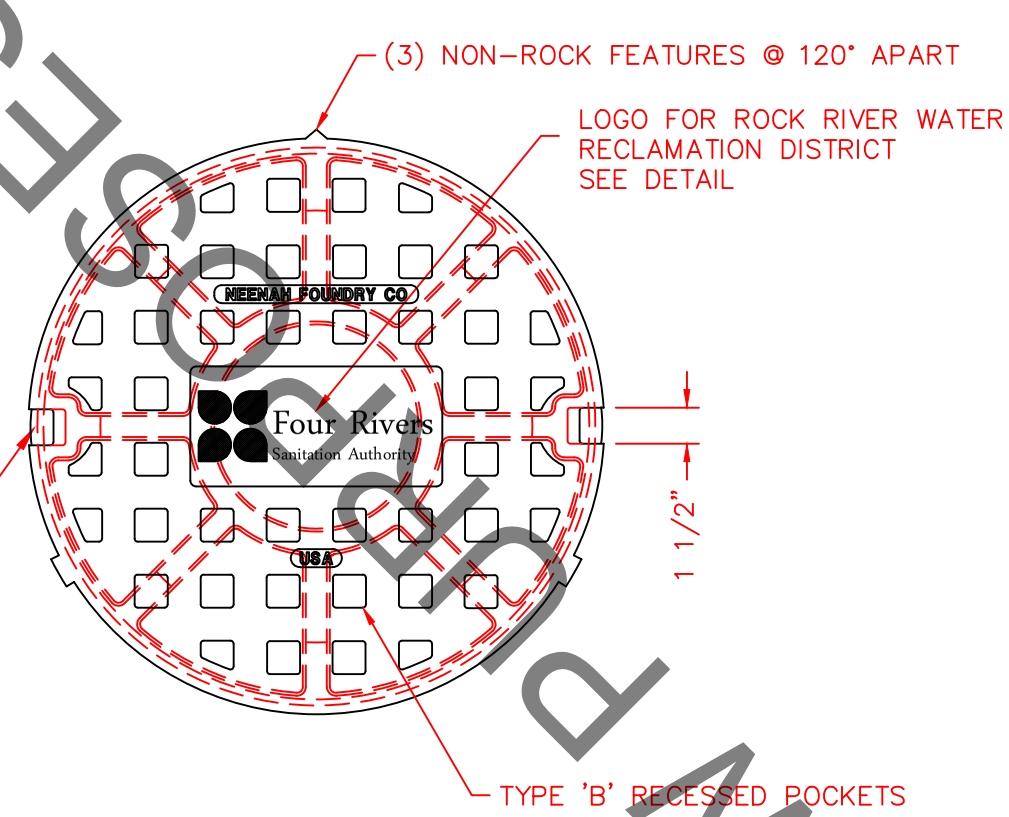

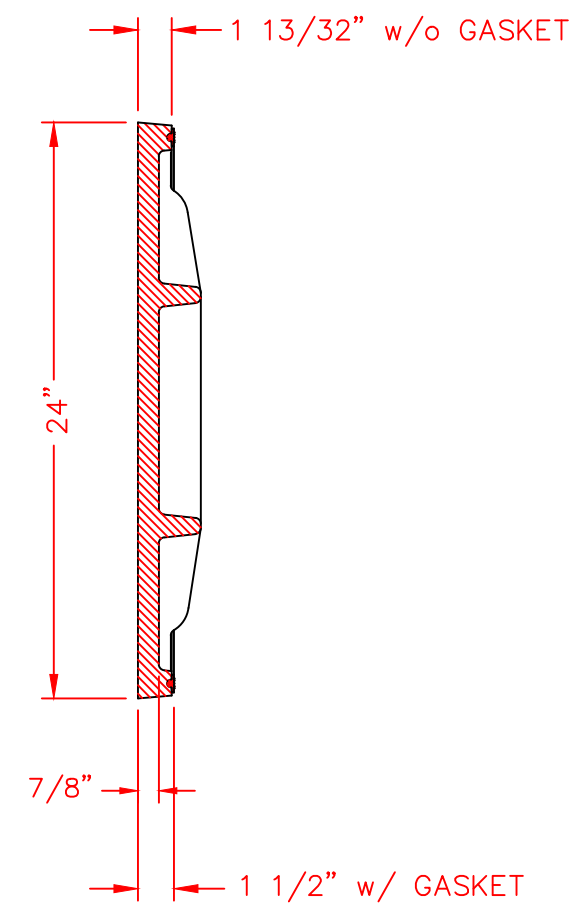

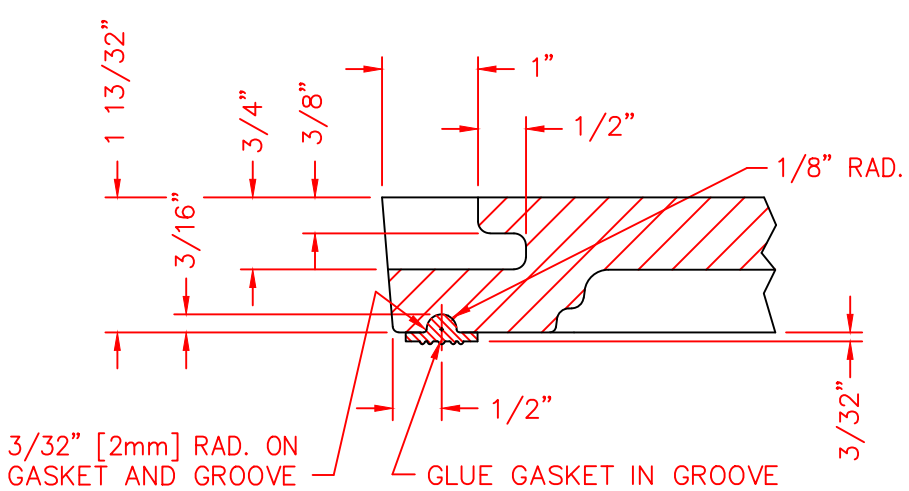

T-SEAL / CONCEALED PICK DETAIL
HALF SCALE
(GASKET NO. 02797)

NOTES:
- ALL DIMENSIONS SHOWN ARE IN ENGLISH.
- LOAD RATING: H-25 / HS-25
- EQUIPMENT NOS.: D99992978, K99999169
- MATERIAL: CAST GRAY IRON ASTM A-48, CLASS 35B
- FINISH: NO PAINT
- WEIGHT: ≈138#

REV	DATE	DESCRIPTION	DR	CH	APP
1	01-31-2022	ADDED LOGO DIMS	RKB	NJK	HSH

DR. RKB	SCALE 1/8"=1"	TITLE: R-1670 NON-ROCK SOLID LID W/ AS-CAST 'T' GASKET AND LOGO	
CH. NJK			
APP. HSH	NEENAH FOUNDRY NEENAH WISCONSIN 54956 PHONE 800-558-5075 LINCOLN, NEBRASKA 68529 PHONE 800-234-7466	NF-16700358	B
DATE 03-01-2021			
www.nfco.com			

CAD DWG. REF: 16700358.DWG- 1

FOR REVIEW PURPOSES ONLY

Melinda Roach

From: Brian Markgraf
Sent: Wednesday, August 25, 2021 11:01 AM
To: Brian Markgraf
Subject: New Lid

Sent from my iPhone

FOR REVIEW PURPOSES ONLY