ROCK RIVER WATER RECLAMATION DISTRICT

WEST STATE STREET SANITARY SEWER
CAPITAL IMPROVEMENT PROJECT NO. 2014
2021

Not to be used for bidding purposes

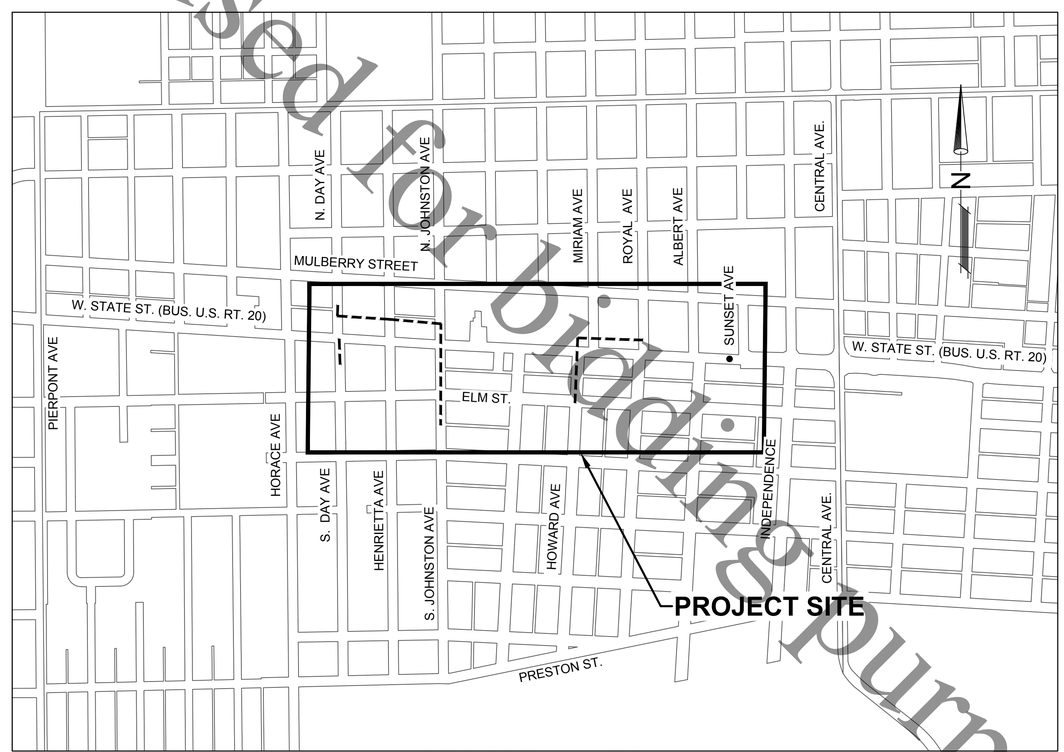

ROCKFORD, ILLINOIS

Rock River Water Reclamation District

BOARD OF TRUSTEES

RICHARD POLLACK	PRESIDENT
JOHN SWEENEY	VICE-PRESIDENT
BEN BERNSTEN	CLERK/TREASURER
DONALD MASSIER	TRUSTEE
ELMER JONES	TRUSTEE

OFFICIALS

TIMOTHY S. HANSON	EXECUTIVE DIRECTOR
CHRISTOPHER T. BAER, PE	DIRECTOR OF ENGINEERING

INDEX OF SHEETS

1. COVER
2. LEGEND, GENERAL NOTES, SUMMARY OF QUANTITIES
3. SEWER ABANDONMENT PLAN
4. PLAN & PROFILE - S. DAY AVE.
5. PLAN & PROFILE - S. JOHNSTON AVE
6. PLAN & PROFILE - N. JOHNSTON AVE.
7. PLAN & PROFILE - JOHNSTON TO HENRIETTA
8. PLAN & PROFILE - HENRIETTA TO N. DAY AVE.
9. PLAN & PROFILE - HOWARD AVE TO W. STATE ST.
10. PLAN & PROFILE - MIRIAM AVE. TO ROYAL AVE.
11. PLAN & PROFILE - W. STATE (ROYAL-ALBERT-SUNSET)
12. TRAFFIC CONTROL PLAN
13. DETAILS
14. DETAILS
15. R.R.W.R.D. STANDARD DETAILS

MATTHEW L. CAMPBELL
062-065272
REGISTERED PROFESSIONAL ENGINEER OF ILLINOIS
DATE: 6/1/2021
EXPIRES: 11/30/21

plot date: 6/2/2021
file: I:\District Projects\W State St Ph 2-2019 Sewer Rehab 0814\01 Design\Drawings\C3D Working\2019 W State\W State 2019.dwg
sheet set: W STATE ST 2019

LEGEND

EXISTING	PROPOSED	
		RIGHT OF WAY LINE
		PROPERTY LINE
		BUILDING
		WATER EDGE
		EASEMENT - PERMANENT SANITARY
		EASEMENT - TEMPORARY CONSTRUCTION
		VEGETATION / TREE LINE
		TREE DRIPLINE
		CONTOUR - MAJOR
		CONTOUR - MINOR
X	X	FENCE
		FENCE - TEMPORARY CONSTRUCTION
SF	SF	FENCE - SILT
		ROADWAY CENTERLINE
		EDGE OF PAVEMENT
		CURB & GUTTER
		GUARD RAIL
		RAILROAD TRACKS
OC		CABLE - OVERHEAD
UC		CABLE - UNDERGROUND
OE		ELECTRIC - OVERHEAD
UE		ELECTRIC - UNDERGROUND
FO		FIBER OPTIC
G		GAS LINE
OT		TELEPHONE - OVERHEAD
UT		TELEPHONE - UNDERGROUND
TV E T HH GM EM		PEDESTALS (CATV, ELEC, TELE), HANDHOLE, GAS METER, ELEC. METER
E		ELECTRIC MANHOLE
SB 1		SOIL BORING
BM# 1	CP# 1	BENCHMARK & CONTROL POINT
		MAILBOX
		UTILITY POLE W/ GUY WIRE & MAST ARM LIGHT POLE
		TREE (DECIDUOUS & CONIFEROUS)
		BUSH & SHRUB
		GROUND / LANDSCAPE LIGHT
XXX.XX	XXX.XX	SPOT ELEVATION

LEGEND

EXISTING	PROPOSED	
		SANITARY MANHOLE & SANITARY SEWER
CO	CO	SANITARY SEWER SERVICE & CLEANOUT
FM	FM	SANITARY FORCEMAIN
		STORM SEWER
		STORM MANHOLE, CATCH BASIN, CURB INLET, INLET SPECIAL
		DRAINAGE CULVERT, WITH END SECTION
W	W	WATER MAIN
WS	WS	WATER SERVICE & WATER SERVICE VALVE
		WATER MAIN VALVE
		WATER MAIN VALVE WITH BOX
		WATER MAIN VALVE WITH VAULT
		WATER MAIN LINESTOP
		FIRE HYDRANT
HMA CONC.	AGG. TURF	EXISTING SURFACE TYPE (HOT-MIX ASPHALT, AGGREGATE, CONCRETE, TURF)
		DITCH CHECK
		INLET OR PIPE PROTECTION
		STABILIZED CONSTRUCTION ENTRANCE
		EROSION CONTROL BLANKET
		HEAVY DUTY EROSION CONTROL BLANKET
		SEEDING AREA, CLASS 1
		SEEDING AREA, CLASS 3
		PAVEMENT REPLACEMENT
		DRIVEWAY REPLACEMENT
		AGGREGATE REPLACEMENT
		RIP RAP

ABBREVIATIONS

ABD =	ABANDON(ED)	LS=	LUMP SUM
CMP =	CORRUGATED METAL PIPE	MH =	MANHOLE
CO =	CLEAN OUT	PVMNT =	PAVEMENT
CTRL=	CONTROL	PRC =	PRECAST REINFORCED CONCRETE
CY =	CUBIC YARD(S)	PR =	PROPOSED
DI =	DUCTILE IRON	RCP =	REINFORCED CONCRETE PIPE
EA =	EACH	REM =	REMOVE(D)
EL =	ELEVATION	REPL =	REPLACE(D)
EROS=	EROSION	R/R =	REMOVE & REPLACE
EX =	EXISTING	SAN =	SANITARY
FES =	FLARED END SECTION	SVC =	SERVICE
FM =	FORCE MAIN	SY =	SQUARE YARD(S)
FT =	FEET	TY =	TYPE
INV =	INVERT	UNK =	UNKNOWN
LF =	LINEAR FEET	VCP =	VITRIFIED CLAY PIPE
LINCIPP =	LINED WITH CURED IN PLACE PIPE	WM =	WATER MAIN

GENERAL NOTES

1. THE CONTRACTOR IS SOLELY RESPONSIBLE FOR EXECUTION OF WORK TO THE LINES AND GRADES SHOWN ON THESE PLANS. CONSTRUCTION SHALL NOT VARY FROM PLANS WITHOUT DISTRICT APPROVAL.
2. THE ROCK RIVER WATER RECLAMATION DISTRICT, MUNICIPALITIES, PERTINENT ROADWAY AUTHORITIES, AND ALL AFFECTED PROPERTY OWNERS SHALL BE NOTIFIED AT LEAST 48 HOURS BEFORE CONSTRUCTION CAN COMMENCE.
3. ALL SERVICE LOCATIONS ARE APPROXIMATE AND MAY BE CHANGED IN THE FIELD WITH THE APPROVAL OF THE INSPECTOR. NO ADDITIONAL COMPENSATION WILL BE AWARDED DUE TO REVISED LOCATION.
4. ALL CASTINGS SHALL BE SET TO FINAL GRADE PER ROCK RIVER WATER RECLAMATION DISTRICT REQUIREMENTS.
5. SANITARY SEWER SHALL BE CONSTRUCTED IN ACCORDANCE WITH THE STANDARD SPECIFICATIONS FOR WATER AND SEWER CONSTRUCTION IN THE STATE OF ILLINOIS, LATEST EDITION, AND THE REQUIREMENTS OF THE ROCK RIVER WATER RECLAMATION DISTRICT.
6. THE CONTRACTOR SHALL VERIFY THE LOCATION OF ALL UTILITIES IN THE FIELD PRIOR TO CONSTRUCTION. THE CONTRACTOR SHALL NOTIFY J.U.L.I.E. AT 8-1-1 OR 1-800-892-0123 AND ANY OTHER UTILITIES NOT ON THE J.U.L.I.E. SYSTEM 48 HOURS PRIOR TO THE START OF CONSTRUCTION.
7. ALL ROADWAY CONSTRUCTION SHALL BE COMPLETED IN ACCORDANCE WITH THE ROADWAY AUTHORITY'S REQUIREMENTS, DISTRICT SPECIFICATIONS, AND THE STANDARD SPECIFICATION FOR ROAD AND BRIDGE CONSTRUCTION IN ILLINOIS, LATEST EDITION.
8. THE CONTRACTOR SHALL COMPLY WITH ALL REQUIREMENTS OF THE I.E.P.A. STANDARDS AND SPECIFICATIONS, AND THE ILLINOIS URBAN MANUAL FOR SOIL EROSION AND SEDIMENT CONTROL.
9. PROTECTION OF WATER SUPPLIES SHALL BE PER THE REQUIREMENTS OF TITLE 35, C, SECTION 370.350 OF THE ILLINOIS RECOMMENDED STANDARDS FOR SEWAGE WORKS.

SPECIAL CONSIDERATIONS

NO WORK SHALL BE PERFORMED WITHIN ILLINOIS DEPARTMENT OF TRANSPORTATION (IDOT) RIGHT-OF-WAY UNTIL THE DETOUR DETAILED IN THESE PLANS IS ESTABLISHED. THROUGH COLLABORATION WITH IDOT, THE RRWRD HAS ARRANGED FOR THE DETOUR OF WEST STATE STREET TO BE ESTABLISHED UNDER SEPARATE CONTRACT. THE DETOUR WILL BE ESTABLISHED ON OR ABOUT AUGUST 15, AND REMAIN IN PLACE FOR SIXTY (60) CALENDAR DAYS TO ALLOW FOR UTILITY WORK, INCLUDING THIS SANITARY SEWER CONTRACT. ANY ADDITIONAL TRAFFIC CONTROL REQUIRED FOR STAGING, AS DETERMINED BY THE CONTRACTOR, SHALL BE HIS OR HER RESPONSIBILITY AT NO ADDITIONAL COST TO THE RRWRD. TRAFFIC CONTROL FOR LOCAL STREETS REQUIRED OUTSIDE OF THE SIXTY CALENDAR DAYS PROVIDED FOR SHALL BE PAID AT THE CONTRACT LUMP SUM UNIT PRICE FOR TRAFFIC CONTROL AND PROTECTION, LOCAL STREETS. SHOULD THE CONTRACTOR REQUIRE MORE THAN SIXTY (60) CALENDAR DAYS FOR WORK WITHIN IDOT RIGHT-OF-WAY, IT SHALL BE THE CONTRACTOR'S RESPONSIBILITY TO PERMIT, ESTABLISH AND MAINTAIN TRAFFIC CONTROL WITHIN IDOT RIGHT-OF-WAY AT NO ADDITIONAL COST TO THE RRWRD.

EXPLANATION OF PROJECT STAGING

PROPOSED WORK, NOTED AS "IDOT" OR "BY OTHERS" WILL BE PERFORMED UNDER SEPARATE CONTRACT UPON THE COMPLETION OF THIS PROJECT.

THESE COMPONENTS ARE SHOWN WITH THE INTENT TO CLARIFY THE FULL SCOPE/INTENT OF THIS PROJECT AND/OR DESIGN COMPONENT THEREOF TO PROSPECTIVE BIDDERS.

PROPOSED PLANS CONTINGENT UPON CITY OF ROCKFORD ROW PERMIT ISSUANCE AND/OR SANITARY SEWER EASEMENT ACQUISITION FROM CITY OF ROCKFORD

PROPOSED SANITARY MANHOLES

PROPOSED MANHOLE NO.	NORTHING	EASTING
1	2044675.4265'	2579170.6513'
2	2045110.2291'	2579197.0530'
3	2045111.2100'	2579285.5314'
4	2045114.8586'	2579614.6408'
5	2044547.7180'	2578276.7641'
6	2044887.3469'	2578273.9296'
7	2045204.8090'	2578271.0232'
8	2045224.3750'	2577937.2651'
9	2045244.3086'	2577597.2364'
20	2044966.2201'	2577609.4426'
21	2045069.6388'	2577608.4369'
30	2044949.8702'	2580144.6600'

SUMMARY OF QUANTITIES

ITEM	DESCRIPTION	QUANTITY	UNIT
1	SANITARY SEWER, SDR 35 PVC, 8" DIA.	2,387	LF
2	SANITARY MANHOLE, 4' DIA.	10	EA
3	SANITARY MANHOLE, 5' DIA.	2	EA
4	SANITARY MANHOLE, 5' DIA. INSIDE DROP	1	EA
5	SANITARY SEWER SERVICE, COMPLETE, 4" DIA.	7	EA
6	SANITARY SEWER SERVICE, COMPLETE, 6" DIA.	6	EA
7	SANITARY MANHOLE REMOVAL	9	EA
8	ABANDON AND FILL SANITARY MANHOLE	10	EA
9	ABANDON AND FILL SANITARY SEWER, VARIOUS DIA.	1	LS
10	ROCK EXCAVATION, SANITARY SEWER	725	CY
11	PAVEMENT REMOVAL	2,692	SY
12	PAVMENT PATCHING, CLASS D, 6"	2,692	SY
13	PCC CURB AND GUTTER REMOVAL AND REPLACEMENT	298	LF
14	PCC DRIVEWAY REMOVAL AND REPLACEMENT, 6"	38	SY
15	PCC SIDEWALK, REMOVAL AND REPLACEMENT, 4"	1,662	SF
16	AGGREGATE BASE COURSE, TYPE B, 12"	2,692	SY
17	PAINT PAVEMENT MARKING, LINE 4, WHITE	180	LF
18	PAINT PAVEMENT MARKING, LINE 4, YELLOW	840	LF
19	PAINT PAVEMENT MARKING, LINE 24, WHITE	60	LF
20	TREE REMOVAL	1	LS
21	TEMPORARY CONSTRUCTION FENCE	100	LF
22	PERIMETER SILT FENCE	1,133	LF
23	INLET PROTECTION	29	EA
24	TURF RESTORATION, 6" TOPSOIL, CLASS 1 SEEDING, FERTILIZER	0.7	ACRE
25	CONSTRUCTION LAYOUT	1	LS
26	TRAFFIC CONTROL AND PROTECTION (LOCAL STREETS)	1	LS

PAINT PAVEMENT MARKINGS

4" WHITE - CROSSWALK	
STA. 6+94	90LF
STA. 7+55	90LF
4" YELLOW - DOUBLE LANE LINE	
STA. 4+30 - 6+90	520LF
STA. 7+60 - 9+20	320LF
24" WHITE STOP BAR	
STA. 3+40 RT (S. DAY AVE)	18LF
STA. 6+88 RT	21LF
STA. 7+63 LT	21LF

FINAL LAYOUT OF PAVEMENT MARKINGS SHALL BE AS DIRECTED BY THE RRWRD.

CONTROL POINTS

POINT NO.	NORTHING	EASTING	STATION / OFFSET	DESCRIPTION
CP 1	2045117.7100	2045117.7100	4+09, 8LT	CUT "X"
CP 3	2045078.8300	2578232.3600	7+53, 40LT	CUT "X"
CP 5	2044968.2900	2579236.9000	52+96, 40RT	CUT "X"
CP 6	2045017.3300	2579645.1200	58+82, 98RT	CUT "X"
CP 31	2045278.0100	2577617.6700	15+87, 20RT	CUT "X"
CP 32	2045248.8400	2577906.4600	12+45, 22RT	CUT "X"
CP 33	2045222.2800	2578253.3100	8+97, 16RT	CUT "X"
CP 35	2044752.4500	2578299.9800	4+26, 25RT	CUT "X"
CP 36	2044555.2500	2578306.1100	2+28, 29RT	CUT "X"
CP 7	2044932.7700	2579914.7300	236+86, 29RT	CUT "X"

Not to be used for bidding purposes

Rock River Water Reclamation District
ROCK RIVER WATER RECLAMATION DISTRICT
3501 KISHWAUKEE STREET
ROCKFORD, ILLINOIS 61109
(815) 387-7660

No.	DATE	REVISION	INT.

WEST STATE STREET SANITARY SEWER
CAPITAL IMPROVEMENT PROJECT NO. 2014

LEGEND & GEN NOTES & SUM OF QTYS

FOR BID

Date 6/2/2021

file: I:\District Projects\W State St Ph 2-2019 Sewer Rehab 0814\01 Design\Drawings\C3D Working\2019 W State\W State 2019.dwg

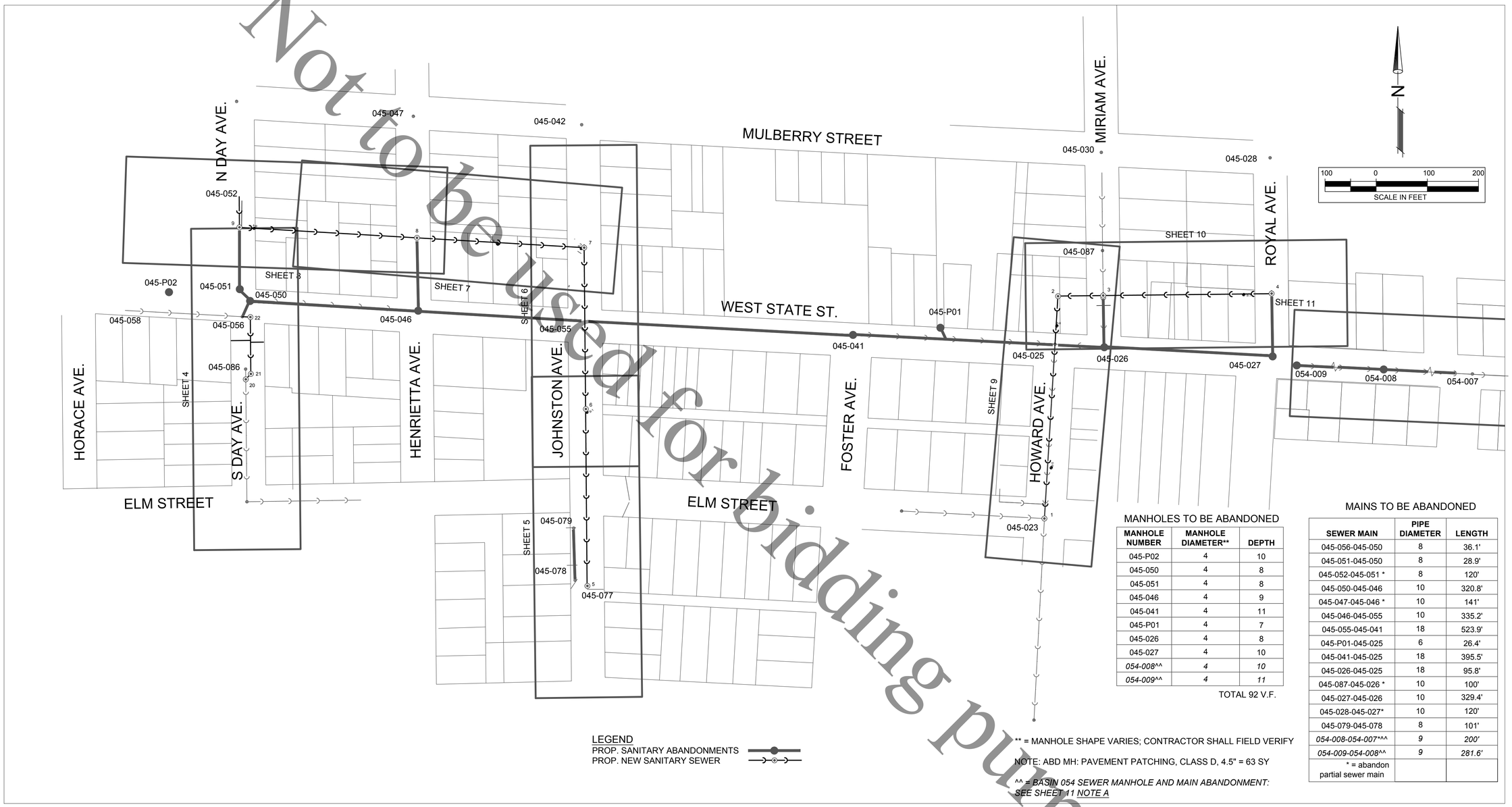

Not to be used for bidding purposes

LEGEND
PROP. SANITARY ABANDONMENTS
PROP. NEW SANITARY SEWER

MANHOLES TO BE ABANDONED

MANHOLE NUMBER	MANHOLE DIAMETER**	DEPTH
045-P02	4	10
045-050	4	8
045-051	4	8
045-046	4	9
045-041	4	11
045-P01	4	7
045-026	4	8
045-027	4	10
*054-008^^*	*4*	*10*
*054-009^^*	*4*	*11*

TOTAL 92 V.F.

** = MANHOLE SHAPE VARIES; CONTRACTOR SHALL FIELD VERIFY

NOTE: ABD MH: PAVEMENT PATCHING, CLASS D, 4.5" = 63 SY

^^ = BASIN 054 SEWER MANHOLE AND MAIN ABANDONMENT: SEE SHEET 11 NOTE A

MAINS TO BE ABANDONED

SEWER MAIN	PIPE DIAMETER	LENGTH
045-056-045-050	8	36.1'
045-051-045-050	8	28.9'
045-052-045-051 *	8	120'
045-050-045-046	10	320.8'
045-047-045-046 *	10	141'
045-046-045-055	10	335.2'
045-055-045-041	18	523.9'
045-P01-045-025	6	26.4'
045-041-045-025	18	395.5'
045-026-045-025	18	95.8'
045-087-045-026 *	10	100'
045-027-045-026	10	329.4'
045-028-045-027*	10	120'
045-079-045-078	8	101'
054-008-054-007^^*	*9*	*200'*
*054-009-054-008^^*	*9*	*281.6'*
* = abandon partial sewer main		

TOTALS, MAINS TO BE ABANDONED
8" SEWER = 286 L.F.
9" SEWER = 482 L.F.
10" SEWER = 1346 L.F.
18" SEWER = 1014 L.F.

TOTALS, SERVICES TO BE ABANDONED
6" SERVICES = 1990 L.F.
QTY IS ESTIMATED FROM MAIN TO ROW AND IS NOT SHOW ON DRAWING.

Rock River Water Reclamation District
ROCK RIVER WATER RECLAMATION DISTRICT
3501 KISHWAUKEE STREET
ROCKFORD, ILLINOIS 61109
(815) 387-7660

No.	DATE	REVISION	INT.

WEST STATE STREET SANITARY SEWER
CAPITAL IMPROVEMENT PROJECT NO. 2014

MANHOLE & MAIN ABANDONMENT

FOR BID

Sheet No. 3 OF 15

Date 6/2/2021

file: I:\District Projects\W State St Ph 2-2019 Sewer Rehab 0814\01 Design\Drawings\C3D Working\2019 W State\W State 2019.dwg

BENCHMARK TABLE

BM #	STA.	O/S	DESCRIPTION	ELEV.
301	1+59	27' RT	RR SPK IN E. FACE PP	810.29
300	3+44	42' RT	CUT "X" IN BB MUELLER SW SIDE	817.63

HORIZONTAL DATUM IS BASED ON THE ILLINOIS STATE PLANE COORDINATE SYSTEM, NAD 1983, WEST ZONE. VERTICAL DATUM IS BASED ON NAVD 1988. FIELD PROCEDURES UTILIZE THE WinGIS CONTROL NETWORK AND CORS STATION RRW1 AS BLUE BOOKED WITH NGS.

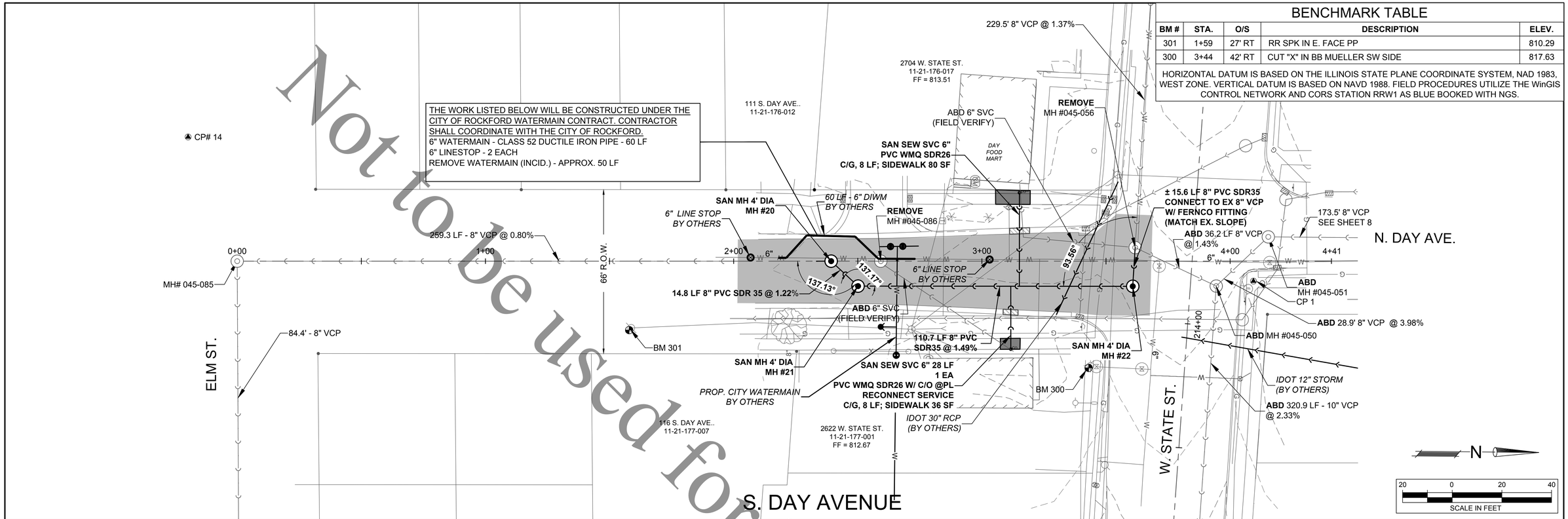

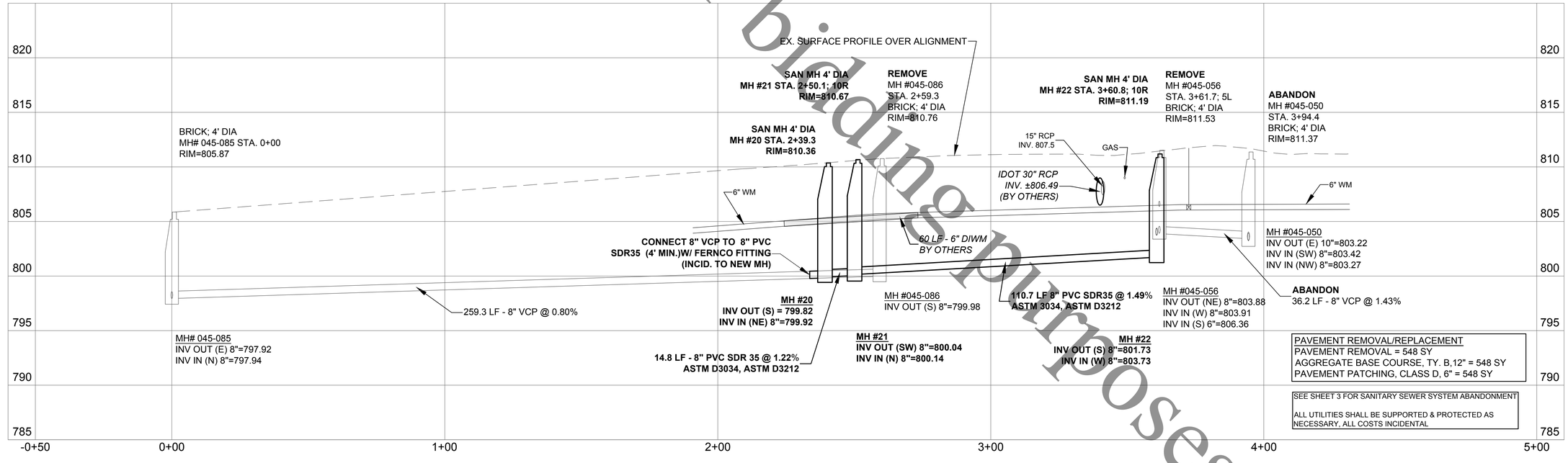

PAVEMENT REMOVAL/REPLACEMENT
PAVEMENT REMOVAL = 548 SY
AGGREGATE BASE COURSE, TY. B,12" = 548 SY
PAVEMENT PATCHING, CLASS D, 6" = 548 SY

SEE SHEET 3 FOR SANITARY SEWER SYSTEM ABANDONMENT

ALL UTILITIES SHALL BE SUPPORTED & PROTECTED AS NECESSARY, ALL COSTS INCIDENTAL

Not to be used for bidding purposes

Rock River Water Reclamation District
ROCK RIVER WATER RECLAMATION DISTRICT
3501 KISHWAUKEE STREET
ROCKFORD, ILLINOIS 61109
(815) 387-7660

No.	DATE	REVISION	INT.

WEST STATE STREET SANITARY SEWER
CAPITAL IMPROVEMENT PROJECT NO. 2014

S. DAY AVE. - W. STATE ST.

FOR BID

Sheet No. 4 OF 15

Date 6/2/2021

file: I:\District Projects\W State St Ph 2-2019 Sewer Rehab 0814\01 Design\Drawings\C3D Working\2019 W State\W State 2019.dwg

BENCHMARK TABLE

BM #	STA.	O/S	DESCRIPTION	ELEV.
308	0+23	37' LT	CUT "X" IN E. BONNET BOLT	785.44
305	3+55	18' LT	S. BONNET BOLT IN FH	791.95

HORIZONTAL DATUM IS BASED ON THE ILLINOIS STATE PLANE COORDINATE SYSTEM, NAD 1983, WEST ZONE. VERTICAL DATUM IS BASED ON NAVD 1988. FIELD PROCEDURES UTILIZE THE WinGIS CONTROL NETWORK AND CORS STATION RRW1 AS BLUE BOOKED WITH NGS.

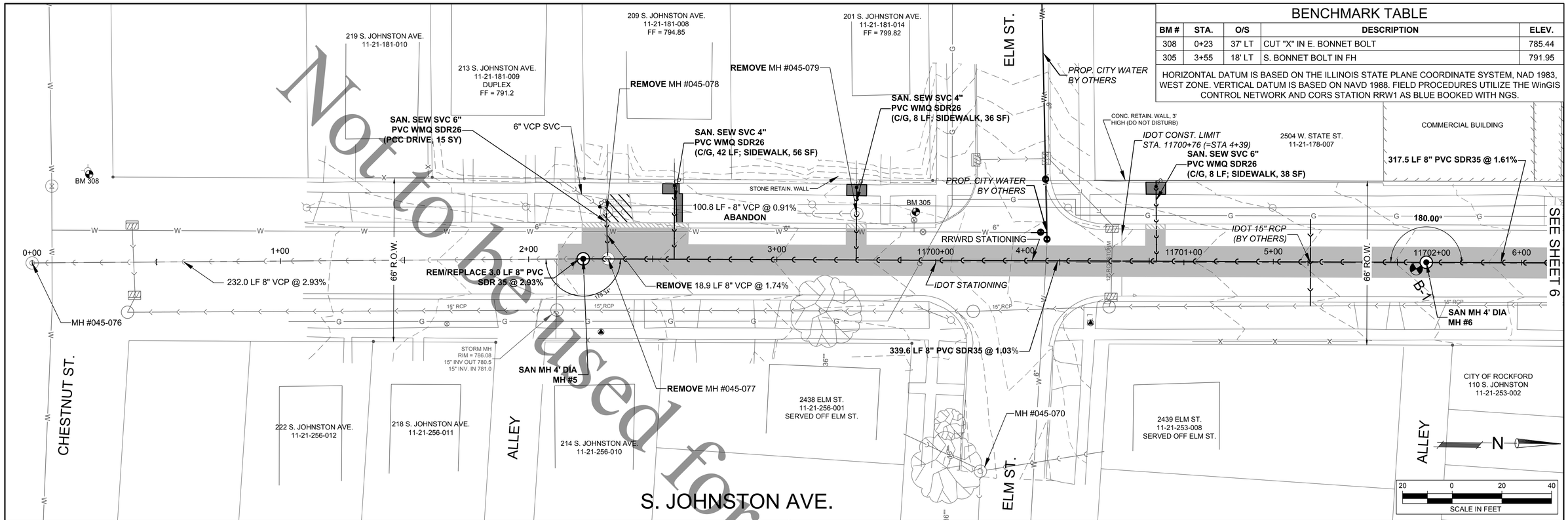

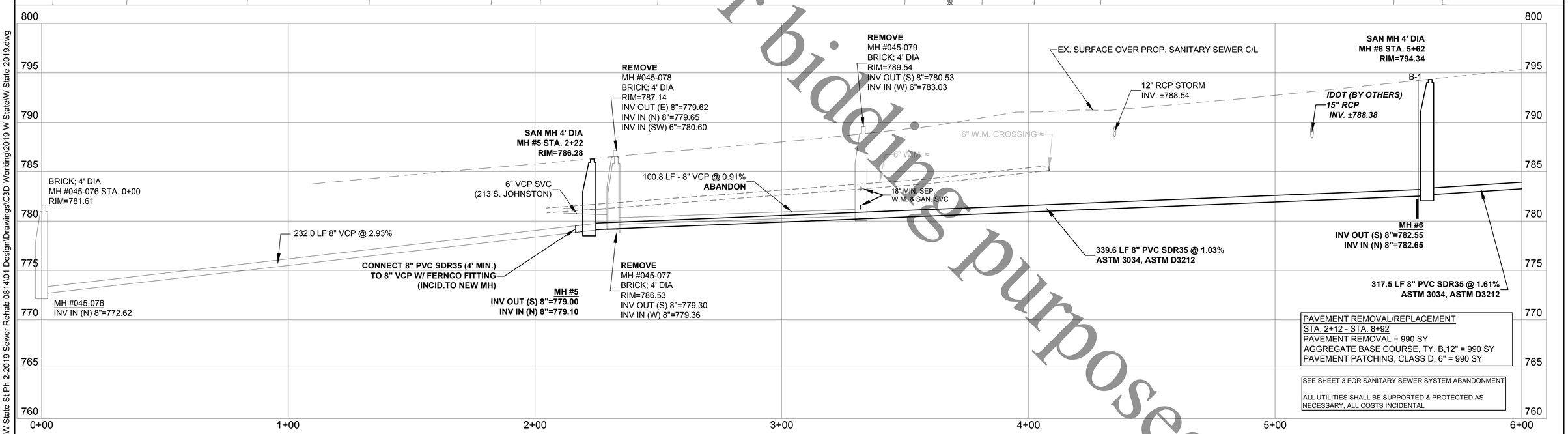

PAVEMENT REMOVAL/REPLACEMENT
STA. 2+12 - STA. 8+92
PAVEMENT REMOVAL = 990 SY
AGGREGATE BASE COURSE, TY. B,12" = 990 SY
PAVEMENT PATCHING, CLASS D, 6" = 990 SY

SEE SHEET 3 FOR SANITARY SEWER SYSTEM ABANDONMENT

ALL UTILITIES SHALL BE SUPPORTED & PROTECTED AS NECESSARY, ALL COSTS INCIDENTAL

Not to be used for bidding purposes

Rock River Water Reclamation District
ROCK RIVER WATER RECLAMATION DISTRICT
3501 KISHWAUKEE STREET
ROCKFORD, ILLINOIS 61109
(815) 387-7660

No.	DATE	REVISION	INT.

WEST STATE STREET SANITARY SEWER
CAPITAL IMPROVEMENT PROJECT NO. 2014

S. JOHNSTON AVE

FOR BID

Sheet No. 5 OF 15

Date 6/2/2021

file: I:\District Projects\W State St Ph 2-2019 Sewer Rehab 081401 Design\Drawings\C3D Working\2019 W State\W State 2019.dwg

BENCHMARK TABLE

BM #	STA.	O/S	DESCRIPTION	ELEV.
316	8+86	20.6' RT	RR SPK IN S. FACE OF PP	802.72

HORIZONTAL DATUM IS BASED ON THE ILLINOIS STATE PLANE COORDINATE SYSTEM, NAD 1983, WEST ZONE. VERTICAL DATUM IS BASED ON NAVD 1988. FIELD PROCEDURES UTILIZE THE WinGIS CONTROL NETWORK AND CORS STATION RRW1 AS BLUE BOOKED WITH NGS.

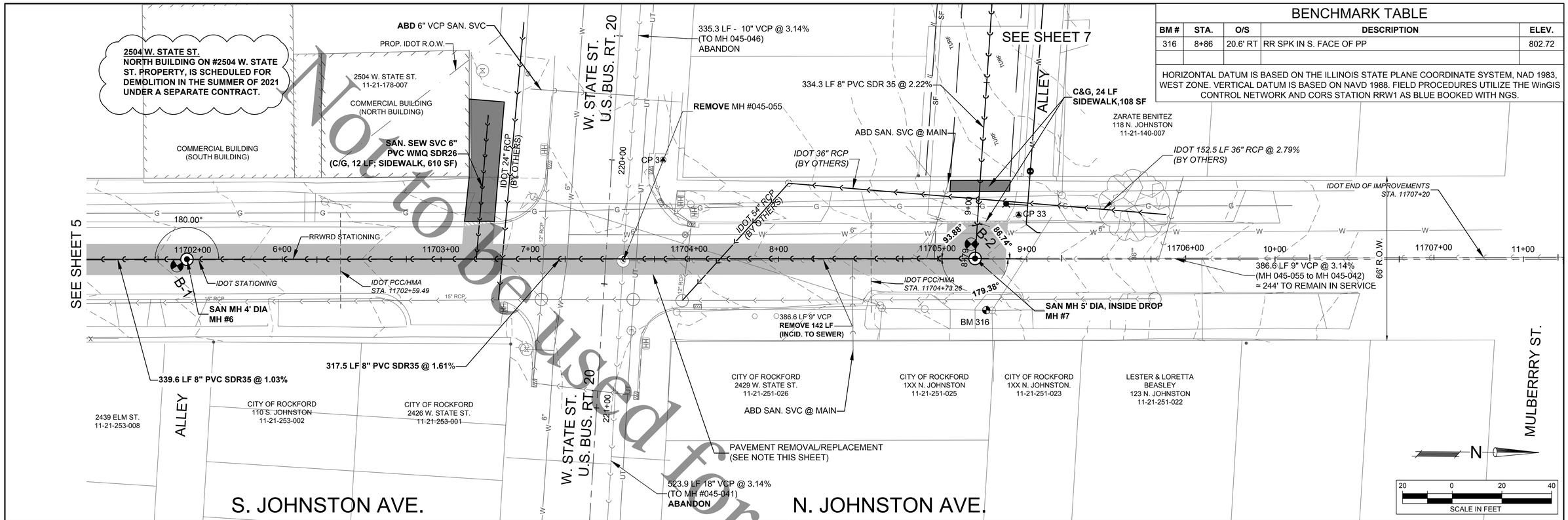

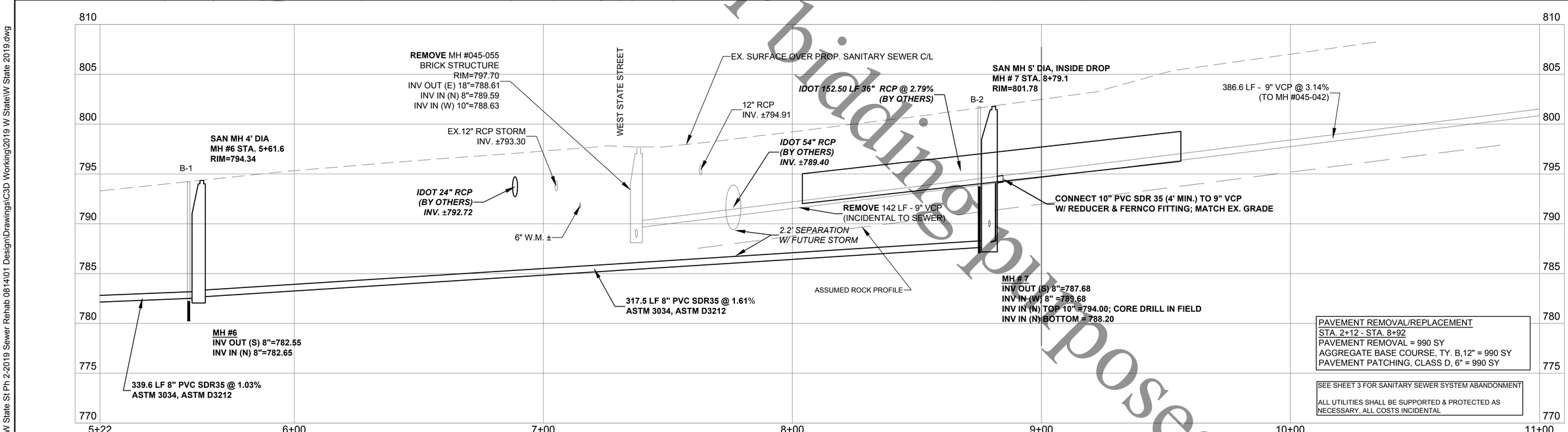

PAVEMENT REMOVAL/REPLACEMENT
STA. 2+12 - STA. 8+92
PAVEMENT REMOVAL = 990 SY
AGGREGATE BASE COURSE, TY. B,12" = 990 SY
PAVEMENT PATCHING, CLASS D, 6" = 990 SY

SEE SHEET 3 FOR SANITARY SEWER SYSTEM ABANDONMENT

ALL UTILITIES SHALL BE SUPPORTED & PROTECTED AS NECESSARY, ALL COSTS INCIDENTAL

Not to be used for bidding purposes

Rock River Water Reclamation District
ROCK RIVER WATER RECLAMATION DISTRICT
3501 KISHWAUKEE STREET
ROCKFORD, ILLINOIS 61109
(815) 387-7660

No.	DATE	REVISION	INT.

WEST STATE STREET SANITARY SEWER
CAPITAL IMPROVEMENT PROJECT NO. 2014

N. JOHNSTON AVE

FOR BID

Sheet No. 6 OF 15

Date 6/2/2021

file: I:\District Projects\W State St Ph 2-2019 Sewer Rehab 0814\01 Design\Drawings\C3D Working\2019 W State\W State 2019.dwg

BENCHMARK TABLE

BM #	STA.	O/S	DESCRIPTION	ELEV.
316	8+86	20.6' RT	RR SPK IN S. FACE OF PP	802.72
318	12+11	15.5' LT	RR SPK IN S. SIDE OF PP	809.98

HORIZONTAL DATUM IS BASED ON THE ILLINOIS STATE PLANE COORDINATE SYSTEM, NAD 1983, WEST ZONE. VERTICAL DATUM IS BASED ON NAVD 1988. FIELD PROCEDURES UTILIZE THE WinGIS CONTROL NETWORK AND CORS STATION RRW1 AS BLUE BOOKED WITH NGS.

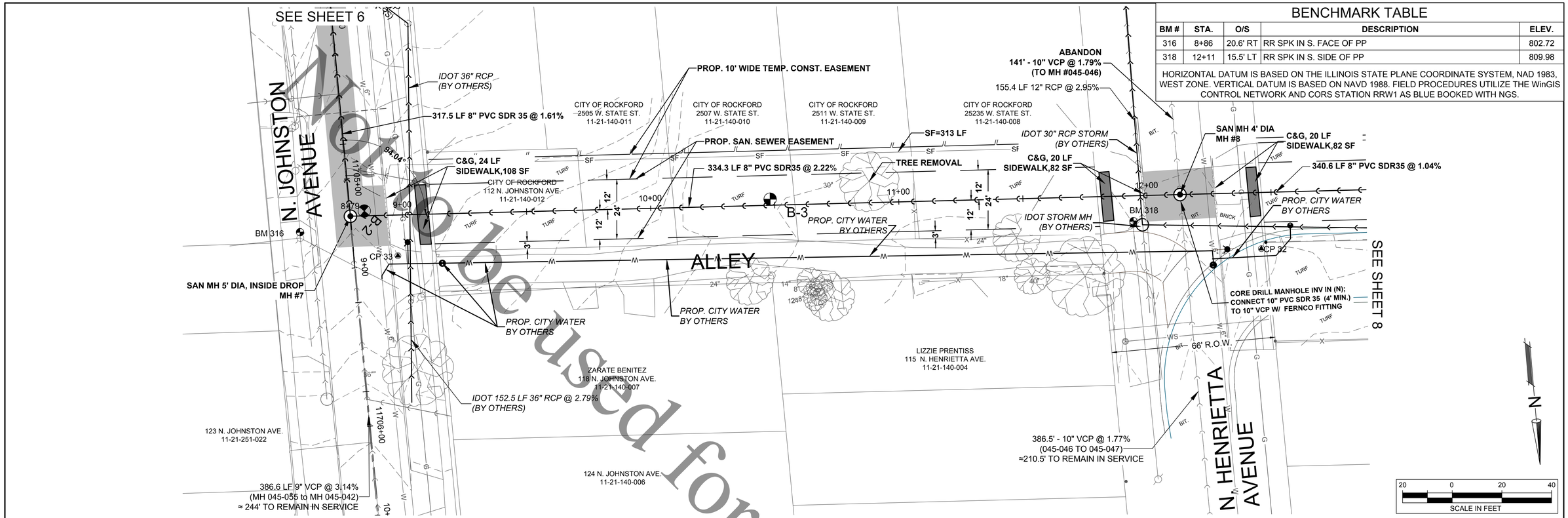

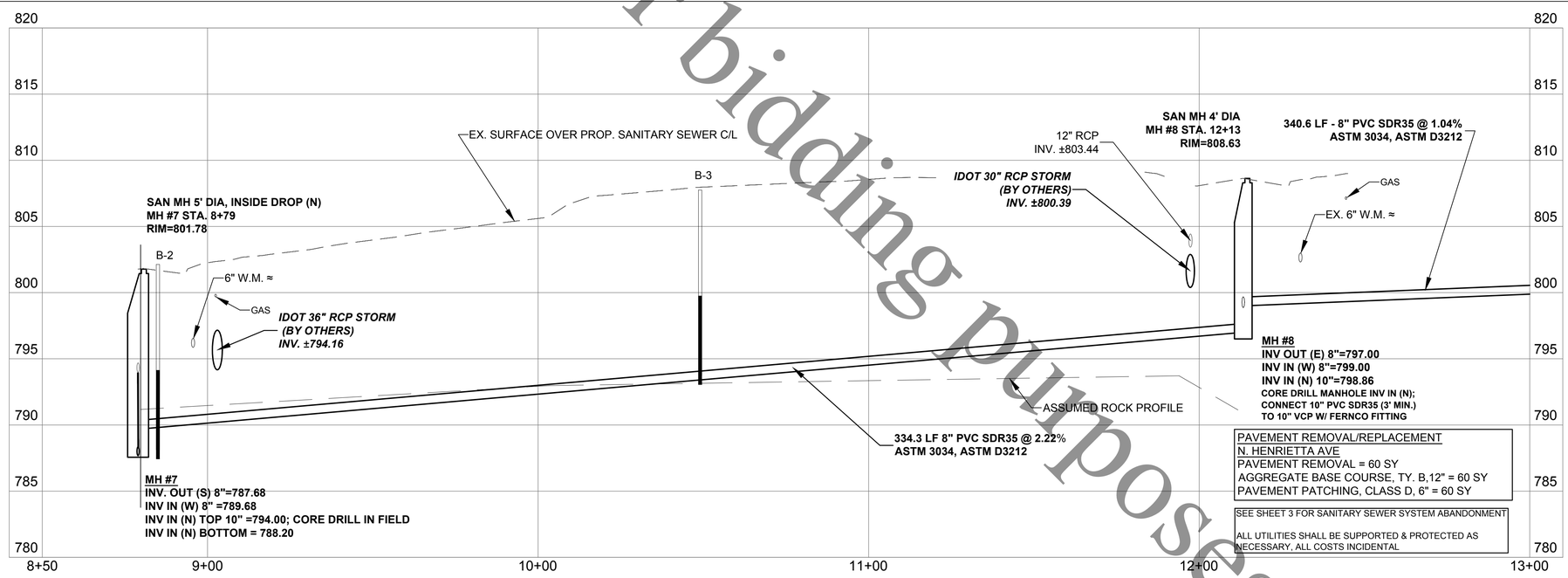

PAVEMENT REMOVAL/REPLACEMENT
N. HENRIETTA AVE
PAVEMENT REMOVAL = 60 SY
AGGREGATE BASE COURSE, TY. B,12" = 60 SY
PAVEMENT PATCHING, CLASS D, 6" = 60 SY

SEE SHEET 3 FOR SANITARY SEWER SYSTEM ABANDONMENT

ALL UTILITIES SHALL BE SUPPORTED & PROTECTED AS NECESSARY, ALL COSTS INCIDENTAL

Not to be used for bidding purposes

Rock River Water Reclamation District
ROCK RIVER WATER RECLAMATION DISTRICT
3501 KISHWAUKEE STREET
ROCKFORD, ILLINOIS 61109
(815) 387-7660

No.	DATE	REVISION	INT.

WEST STATE STREET SANITARY SEWER
CAPITAL IMPROVEMENT PROJECT NO. 2014

JOHNSTON - HENRIETTA

FOR BID

Sheet No. 7 OF 15

Date 6/2/2021

file: I:\District Projects\W State St Ph 2-2019 Sewer Rehab 0814\01 Design\Drawings\C3D Working\2019 W State\W State 2019.dwg

BENCHMARK TABLE

BM #	STA.	O/S	DESCRIPTION	ELEV.
318	12+11	15.5' LT	RR SPK IN S. SIDE OF PP	809.98
321	16+07	72' RT	RR SPK IN PP ON EAST SIDE	815.22

HORIZONTAL DATUM IS BASED ON THE ILLINOIS STATE PLANE COORDINATE SYSTEM, NAD 1983, WEST ZONE. VERTICAL DATUM IS BASED ON NAVD 1988. FIELD PROCEDURES UTILIZE THE WinGIS CONTROL NETWORK AND CORS STATION RRW1 AS BLUE BOOKED WITH NGS.

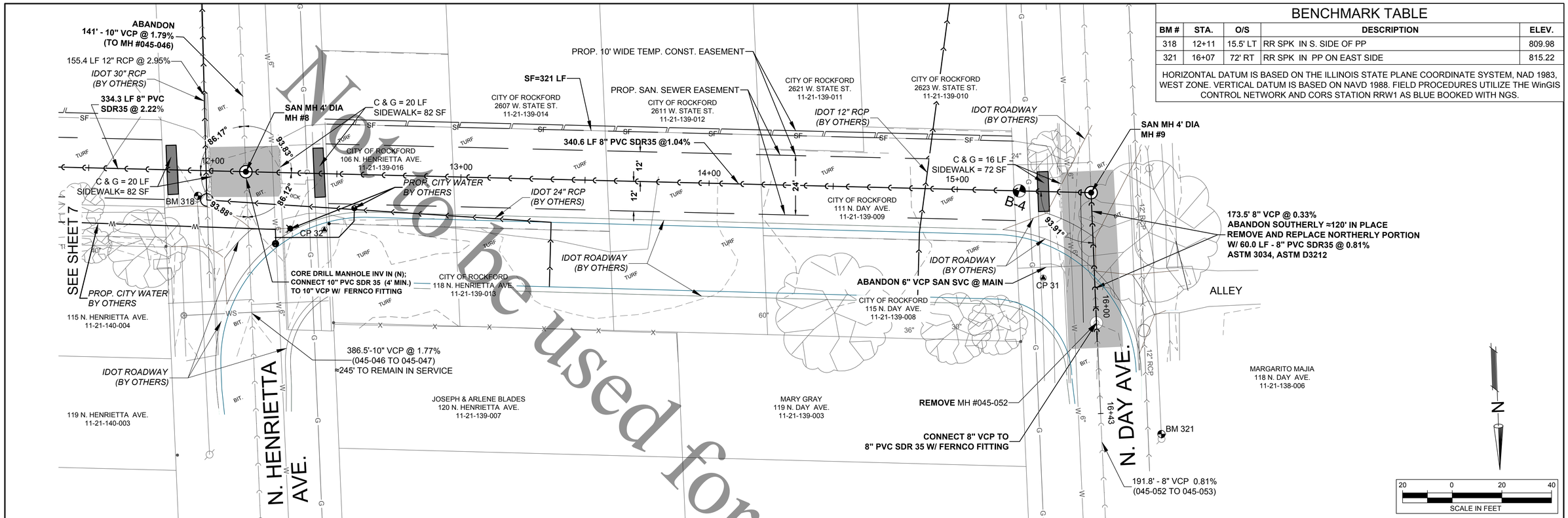

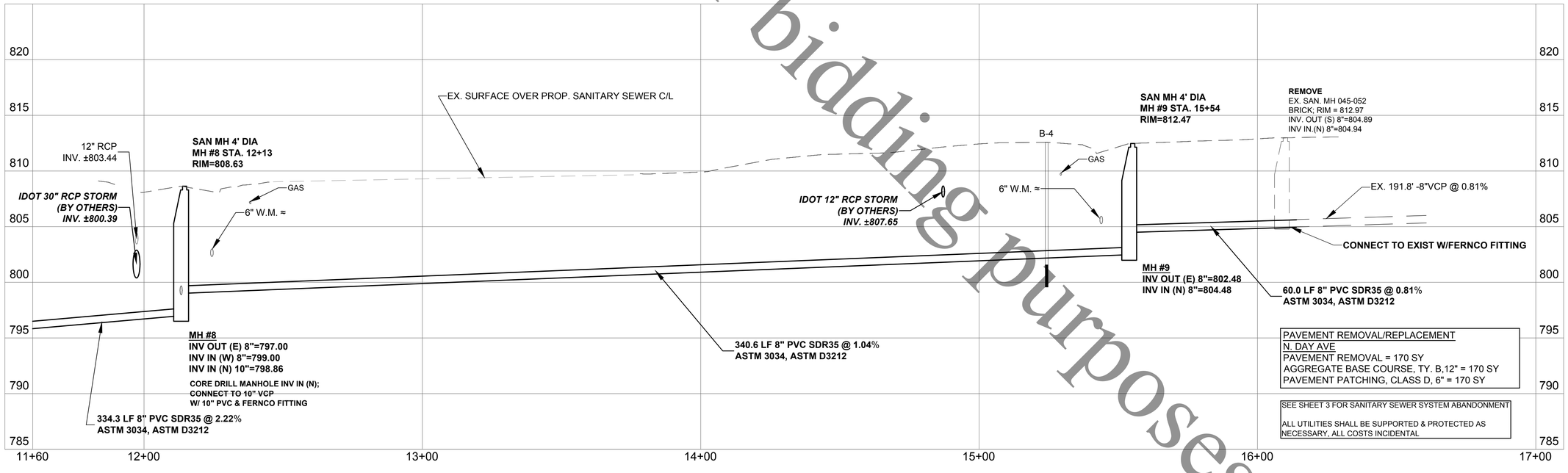

Not to be used for bidding purposes

Rock River Water Reclamation District
ROCK RIVER WATER
RECLAMATION DISTRICT
3501 KISHWAUKEE STREET
ROCKFORD, ILLINOIS 61109
(815) 387-7660

No.	DATE	REVISION	INT.

WEST STATE STREET SANITARY SEWER
CAPITAL IMPROVEMENT PROJECT NO. 2014

HENRIETTA - N. DAY AVE

FOR BID

Sheet No. 8 OF 15

Date 6/2/2021

file: I:\District Projects\W State St Ph 2-2019 Sewer Rehab 0814\01 Design\Drawings\C3D Working\2019 W State\W State 2019.dwg

BENCHMARK TABLE

BM #	STA.	O/S	DESCRIPTION	ELEV.
306	50+26	26' RT		781.76
307	50+42	21' LT		783.88

HORIZONTAL DATUM IS BASED ON THE ILLINOIS STATE PLANE COORDINATE SYSTEM, NAD 1983, WEST ZONE. VERTICAL DATUM IS BASED ON NAVD 1988. FIELD PROCEDURES UTILIZE THE WinGIS CONTROL NETWORK AND CORS STATION RRW1 AS BLUE BOOKED WITH NGS.

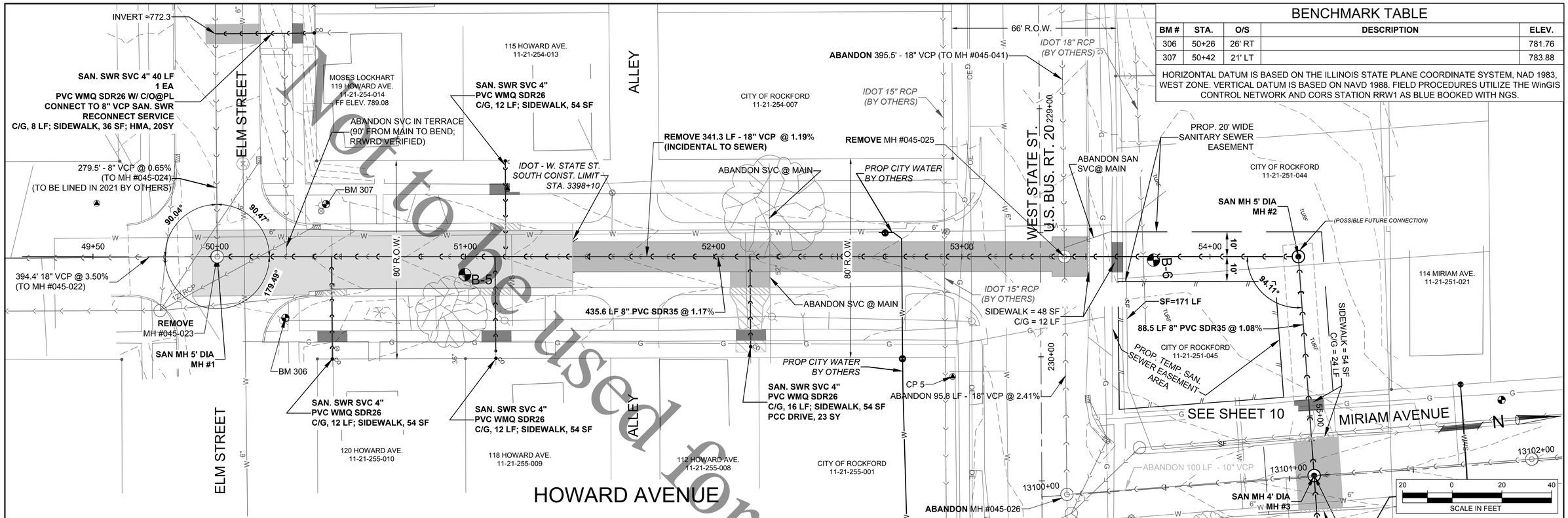

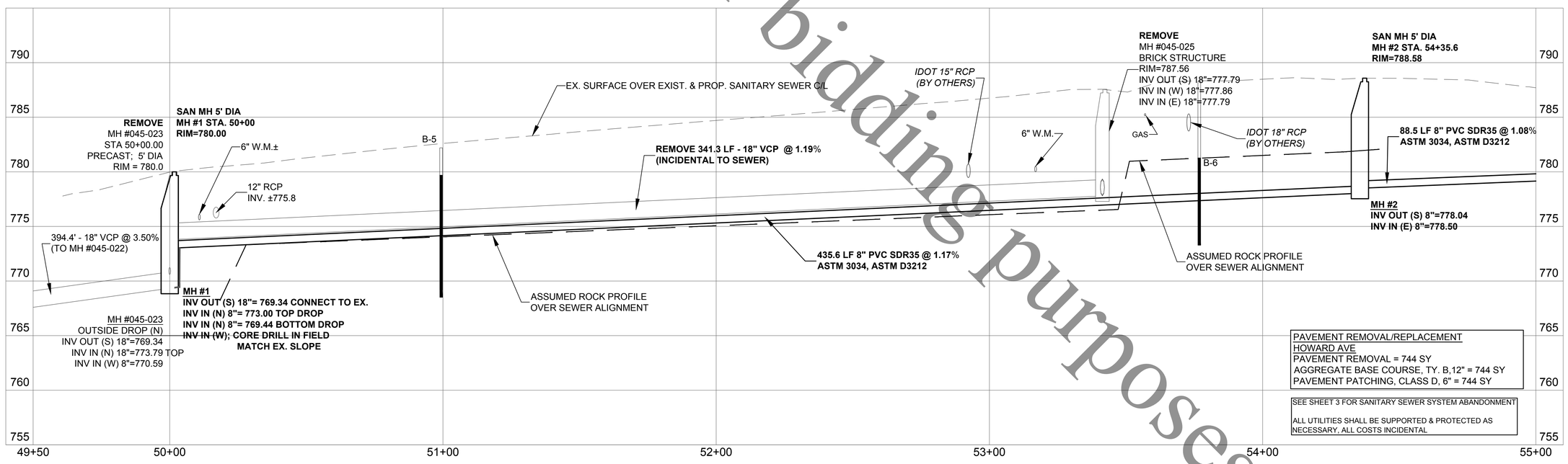

PAVEMENT REMOVAL/REPLACEMENT
HOWARD AVE
PAVEMENT REMOVAL = 744 SY
AGGREGATE BASE COURSE, TY. B,12" = 744 SY
PAVEMENT PATCHING, CLASS D, 6" = 744 SY

SEE SHEET 3 FOR SANITARY SEWER SYSTEM ABANDONMENT

ALL UTILITIES SHALL BE SUPPORTED & PROTECTED AS NECESSARY, ALL COSTS INCIDENTAL

Not to be used for bidding purposes

Rock River Water Reclamation District
ROCK RIVER WATER
RECLAMATION DISTRICT
3501 KISHWAUKEE STREET
ROCKFORD, ILLINOIS 61109
(815) 387-7660

No.	DATE	REVISION	INT.

WEST STATE STREET SANITARY SEWER
CAPITAL IMPROVEMENT PROJECT NO. 2014

HOWARD AVE - W STATE STREET

FOR BID

Sheet No.
9 OF 15

Date
6/2/2021

file: I:\District Projects\W State St Ph 2-2019 Sewer Rehab 0814\01 Design\Drawings\C3D Working\2019 W State\W State 2019.dwg

BENCHMARK TABLE

BM #	STA.	O/S	DESCRIPTION	ELEV.
312	55+45	71' RT	CUT "X" IN FH ON S.E. BB IN MUELLER	788.82
313	54+99.5	77' LT	RR SPK IN PP ON S, FACE	790.51
309			NOT IN FIELD BOOK	
310	58+18.5	30.6' LT	RR SPIKE IN PP ON EAST FACE	795.81

HORIZONTAL DATUM IS BASED ON THE ILLINOIS STATE PLANE COORDINATE SYSTEM, NAD 1983, WEST ZONE. VERTICAL DATUM IS BASED ON NAVD 1988. FIELD PROCEDURES UTILIZE THE WinGIS CONTROL NETWORK AND CORS STATION RRW1 AS BLUE BOOKED WITH NGS.

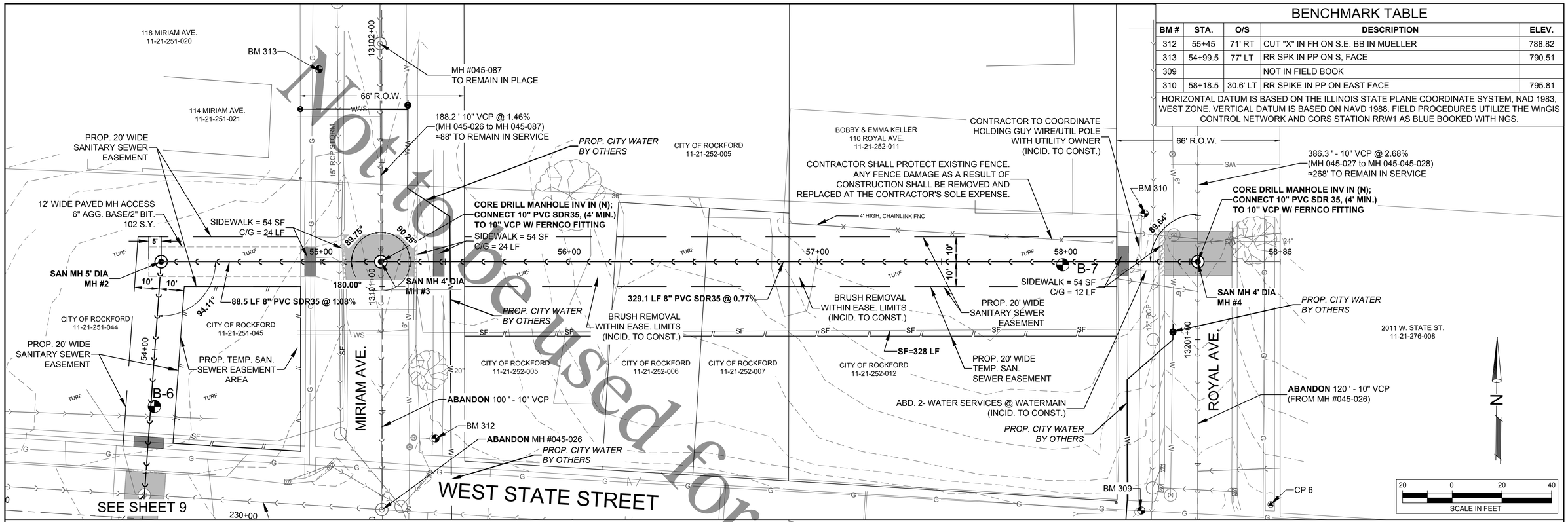

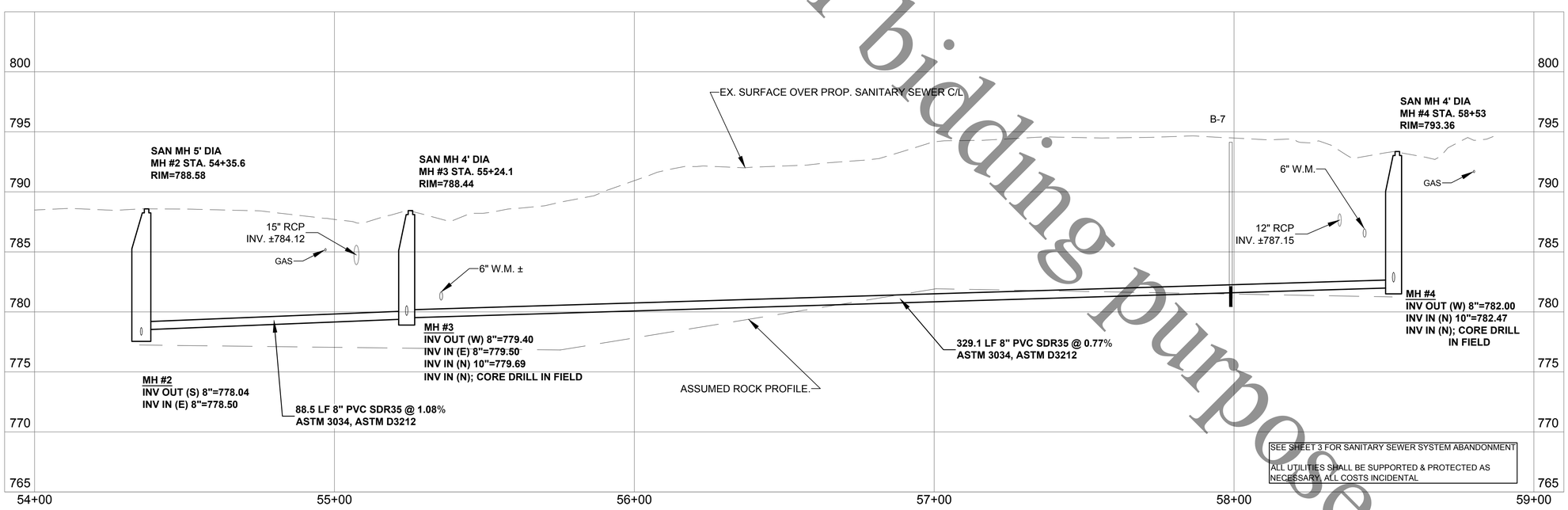

SEE SHEET 3 FOR SANITARY SEWER SYSTEM ABANDONMENT

ALL UTILITIES SHALL BE SUPPORTED & PROTECTED AS NECESSARY, ALL COSTS INCIDENTAL

PAVEMENT REMOVAL/REPLACEMENT
MIRIAM AVE
PAVEMENT REMOVAL = 47 SY
AGGREGATE BASE COURSE, TY. B,12" = 47 SY
PAVEMENT PATCHING, CLASS D, 6" = 47 SY
ROYAL AVE
PAVEMENT REMOVAL = 44 SY
AGGREGATE BASE COURSE, TY. B,12" = 44 SY
PAVEMENT PATCHING, CLASS D, 6" = 44 SY

Rock River Water Reclamation District
ROCK RIVER WATER
RECLAMATION DISTRICT
3501 KISHWAUKEE STREET
ROCKFORD, ILLINOIS 61109
(815) 387-7660

No.	DATE	REVISION	INT.

WEST STATE STREET SANITARY SEWER
CAPITAL IMPROVEMENT PROJECT NO. 2014

MIRIAM AVE - ROYAL AVE

Sheet No.
10 OF 15

FOR BID

Date
6/2/2021

Not to be used for bidding purposes

file: I:\District Projects\W State St Ph 2-2019 Sewer Rehab 081401 Design\Drawings\C3D Working\2019 W State\W State 2019.dwg

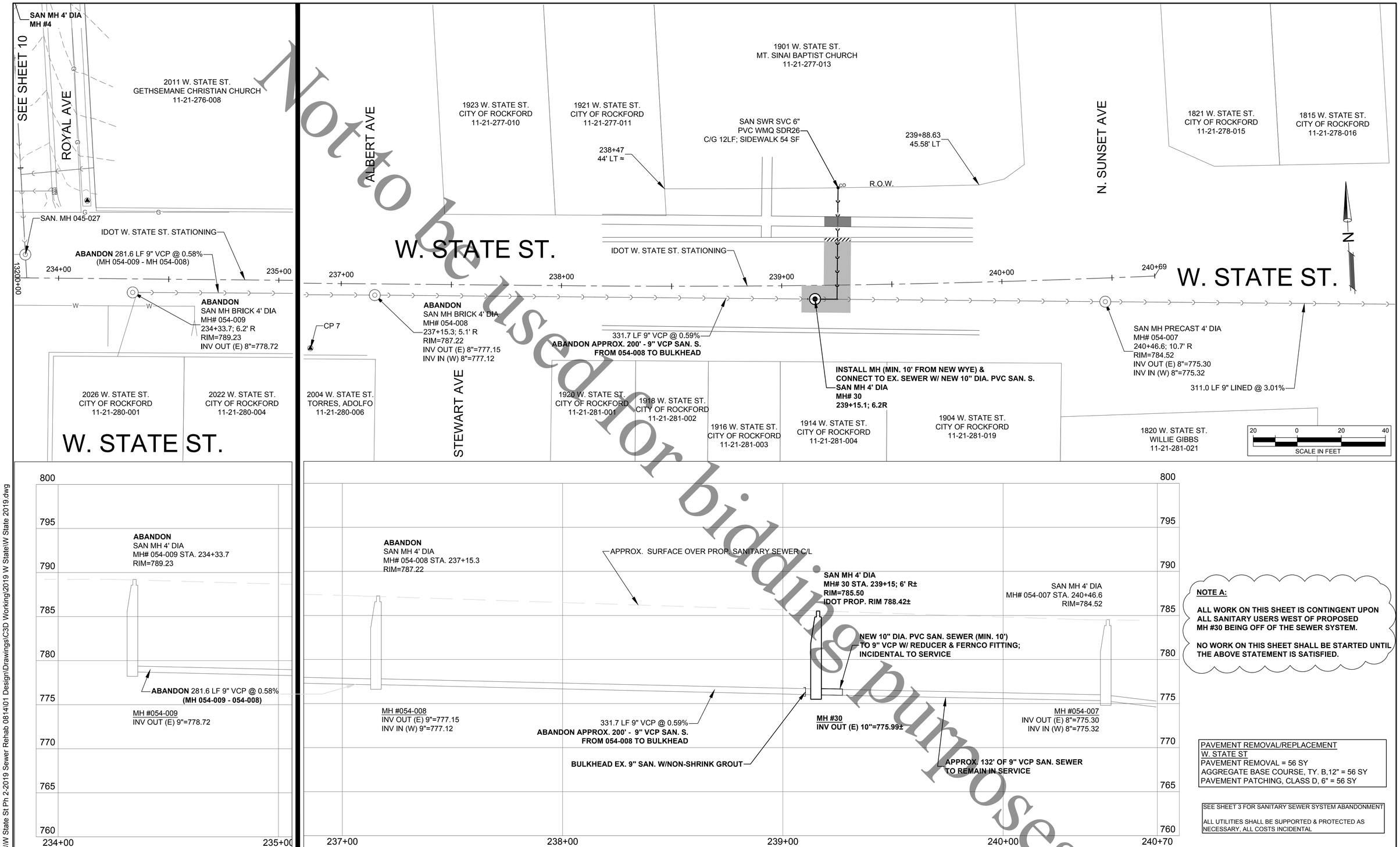

NOTE A:

ALL WORK ON THIS SHEET IS CONTINGENT UPON ALL SANITARY USERS WEST OF PROPOSED MH #30 BEING OFF OF THE SEWER SYSTEM.

NO WORK ON THIS SHEET SHALL BE STARTED UNTIL THE ABOVE STATEMENT IS SATISFIED.

PAVEMENT REMOVAL/REPLACEMENT
W. STATE ST
PAVEMENT REMOVAL = 56 SY
AGGREGATE BASE COURSE, TY. B,12" = 56 SY
PAVEMENT PATCHING, CLASS D, 6" = 56 SY

SEE SHEET 3 FOR SANITARY SEWER SYSTEM ABANDONMENT

ALL UTILITIES SHALL BE SUPPORTED & PROTECTED AS NECESSARY, ALL COSTS INCIDENTAL

Not to be used for bidding purposes

Rock River Water Reclamation District
ROCK RIVER WATER RECLAMATION DISTRICT
3501 KISHWAUKEE STREET
ROCKFORD, ILLINOIS 61109
(815) 387-7660

No.	DATE	REVISION	INT.

WEST STATE STREET SANITARY SEWER
CAPITAL IMPROVEMENT PROJECT NO. 2014

W STATE ST. (ROYAL-ALBERT-SUNSET)

FOR BID

Sheet No.
11 OF 15

Date
6/2/2021

file: I:\District Projects\W State St Ph 2-2019 Sewer Rehab 0814\01 Design\Drawings\C3D Working\2019 W State\W State 2019.dwg

SIGN LEGEND

1	ROAD CLOSED AHEAD	W20-3(0)-48
2	DETOUR AHEAD	W20-2-48
3	ROAD CLOSED 500 FT	W20-3(0)-48
4	BARRICADE AHEAD	W21-1100(0)-48
5		M6-1R-2115
6		M6-1L-2115
7		M5-1R-2115
8		M5-1L-2115
9		M6-3-2115
10	DETOUR / EAST / BUSINESS / 20	M4-8-2412 / M3-2-2412 / M4-3-2412 / M1-40-2424
11	DETOUR / WEST / BUSINESS / 20	M4-8-2412 / M3-4-2412 / M4-3-2412 / M1-40-2424
12	END DETOUR	M4-8A-2418
13	ROAD CLOSED TO THRU TRAFFIC	R11-4-6030

- NO WORK SHALL BE PERFORMED WITHIN ILLINOIS DEPARTMENT OF TRANSPORTATION (IDOT) RIGHT-OF-WAY UNTIL THE DETOUR DETAILED IN THESE PLANS IS ESTABLISHED. THROUGH COLLABORATION WITH IDOT, THE RRWRD HAS ARRANGED FOR THE DETOUR OF WEST STATE STREET TO BE ESTABLISHED UNDER SEPARATE CONTRACT. THE DETOUR WILL BE ESTABLISHED ON OR ABOUT AUGUST 15, AND REMAIN IN PLACE FOR SIXTY (60) CALENDAR DAYS TO ALLOW FOR UTILITY WORK, INCLUDING THIS SANITARY SEWER CONTRACT. ANY ADDITIONAL TRAFFIC CONTROL REQUIRED FOR STAGING, AS DETERMINED BY THE CONTRACTOR, SHALL BE HIS OR HER RESPONSIBILITY AT NO ADDITIONAL COST TO THE RRWRD. TRAFFIC CONTROL FOR LOCAL STREETS REQUIRED OUTSIDE OF THE SIXTY CALENDAR DAYS PROVIDED FOR SHALL BE PAID AT THE CONTRACT LUMP SUM UNIT PRICE FOR TRAFFIC CONTROL AND PROTECTION, LOCAL STREETS. SHOULD THE CONTRACTOR REQUIRE MORE THAN SIXTY (60) CALENDAR DAYS FOR WORK WITHIN IDOT RIGHT-OF-WAY, IT SHALL BE THE CONTRACTOR'S RESPONSIBILITY TO PERMIT, ESTABLISH AND MAINTAIN TRAFFIC CONTROL WITHIN IDOT RIGHT-OF-WAY AT NO ADDITIONAL COST TO THE RRWRD.

NOTES:

1. US ROUTE 20 SHALL BE CLOSED TO TRAFFIC AT ALL TIMES FROM DAY AVENUE TO CENTRAL AVENUE FOR THE DURATION OF CONSTRUCTION.
2. CONSTRUCTION SHALL BE STAGED TO MAINTAIN PEDESTRIAN ACCESS WITHIN THE PROJECT LIMITS FOR THE DURATION OF CONSTRUCTION. [redacted]
3. [redacted]
4. ALL SIGNING AND TRAFFIC CONTROL SHALL CONFORM TO DISTRICT 2 STANDARD 40.1.

LEGEND

- SIGN ON PORTABLE OR PERMANENT SUPPORT
- TYPE III BARRICADE WITH FLASHERS
- WORK AREA
- DETOUR ROUTE

Not to be used for bidding purposes

FILE NAME = D264H08-sht-staging_detour.dgn

RS&H

USER NAME = EtzwileE	DESIGNED - CPK	REVISED -	
	DRAWN - MJM	REVISED -	
PLOT SCALE = 1000.0000 ' / in.	CHECKED - MXF	REVISED -	
PLOT DATE = 3/12/2020	DATE - 03/02/2020	REVISED -	

STATE OF ILLINOIS
DEPARTMENT OF TRANSPORTATION

CONSTRUCTION STAGING AND TRAFFIC CONTROL
DETOUR PLAN

SCALE: NTS | SHEET 1 OF 12 SHEETS | STA. 197+50.00 TO STA. 263+50.00

F.A.P. RTE.	SECTION	COUNTY	TOTAL SHEETS	SHEET NO.
303	(40,41) R	WINNEBAGO	311	84
		CONTRACT NO. 64H08		
	ILLINOIS	FED. AID PROJECT		

Rock River Water Reclamation District

ROCK RIVER WATER
RECLAMATION DISTRICT
3501 KISHWAUKEE STREET
ROCKFORD, ILLINOIS 61109
(815) 387-7660

No.	DATE	REVISION	INT.

WEST STATE STREET SANITARY SEWER
CAPITAL IMPROVEMENT PROJECT NO. 2014

TRAFFIC CONTROL PLAN

Sheet No. 12 OF 15

FOR BID

Date 6/2/2021

file: I:\District Projects\W State St Ph 2-2019 Sewer Rehab 081401 Design\Drawings\C3D Working\2019 W State\W State 2019.dwg

TRAFFIC CONTROL FOR ROAD CLOSURE

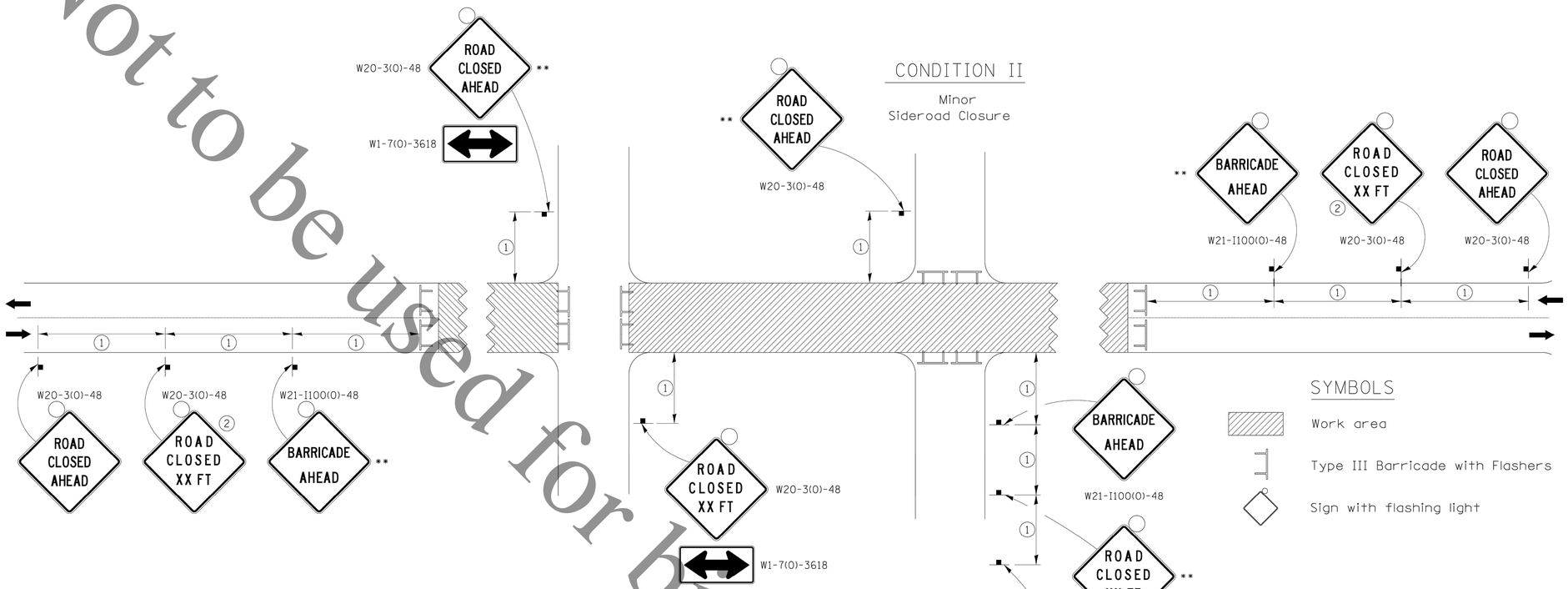

① SIGN SPACING TABLE

Posted Speed	Sign Spacing
45 MPH and above	500′
Below 45 MPH	250′

② SIGN LEGEND

Posted Speed Limit	Distance
45 MPH and above	1000′
Below 45 MPH	500′

ROAD CLOSED TO THRU TRAFFIC
BARRICADE SET UP

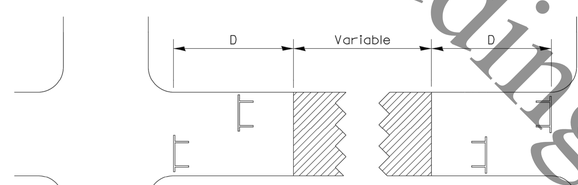

Type III Barricades and R11-4-4830 signs shall be as shown in "Road Closed To Thru Traffic" detail on Highway Standard 701901. If the distance "D" exceeds 2000′ an additional set of barricades and R11-4-4830 shall be placed at each end of the work area.

GENERAL NOTES

Longitudinal dimensions may be adjusted to fit field conditions.

Side roads requiring all three signs as shown in CONDITION I (Major Sideroad Closure), shall be listed in the special provision.

** Where local access is to be maintained, barricades are to be set up as shown in "Road Closed To Thru Traffic". Type III Barricades and R11-2-4830 signs shall be as shown in "Road Closed To All Traffic" detail on Highway Standard 701901.

All dimensions are in inches unless otherwise shown.

TYPICAL APPLICATION FOR ROAD CLOSURE

FILE NAME = District 2 Standard	USER NAME = IDOT/District 2	DESIGNED -	REVISED - 8-03-17	STATE OF ILLINOIS DEPARTMENT OF TRANSPORTATION	REGION 2 / DISTRICT 2 STANDARD	F.A. RTE.	SECTION	COUNTY	TOTAL SHEETS	SHEET NO.
		DRAWN -	REVISED - 1-05-16							
	PLOT SCALE = 1.0000 ' / in.	CHECKED -	REVISED - 8-27-13					CONTRACT NO.		
	PLOT DATE = 1/10/2019	DATE -	REVISED - 10-17-11		SCALE: SHEET NO. OF SHEETS STA. TO STA.	FED. ROAD DIST. NO.	ILLINOIS	FED. AID PROJECT		

TRAFFIC CONTROL FOR ROAD CLOSURE **40.1**

Not to be used for bidding purposes

Rock River Water Reclamation District
ROCK RIVER WATER RECLAMATION DISTRICT
3501 KISHWAUKEE STREET
ROCKFORD, ILLINOIS 61109
(815) 387-7660

No.	DATE	REVISION	INT.

WEST STATE STREET SANITARY SEWER
CAPITAL IMPROVEMENT PROJECT NO. 2014

DETAILS

FOR BID

Sheet No. 13 OF 15

Date 6/2/2021

file: I:\District Projects\W State St Ph 2-2019 Sewer Rehab 0814\01 Design\Drawings\C3D Working\2019 W State\W State 2019.dwg

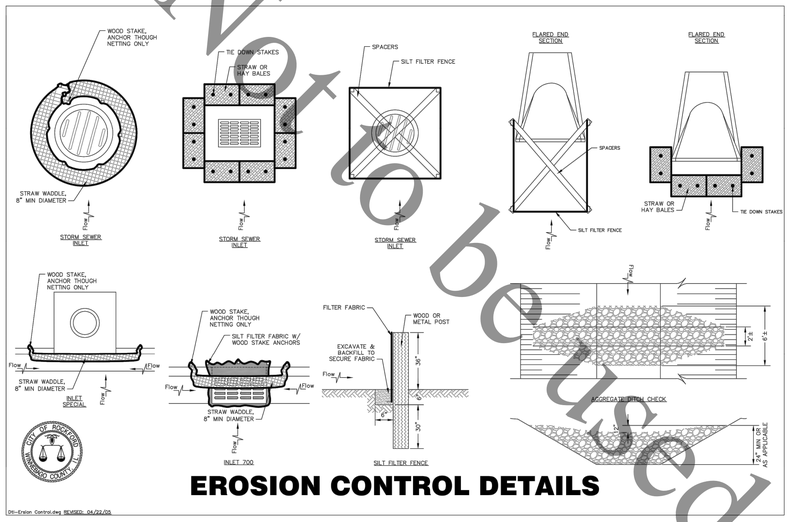

EROSION CONTROL DETAILS

DII-Erosion Control.dwg REVISED: 04/22/05

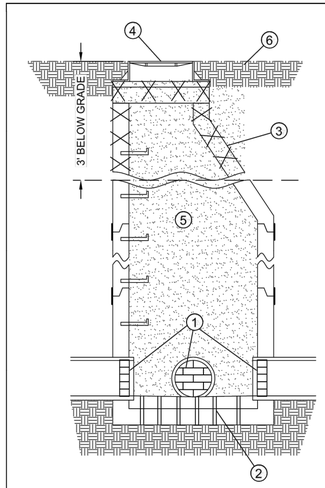

NOTES:

1. PLACE PERMANENT WATERTIGHT PLUGS WITH NON-SHRINK HYDRAULIC CEMENT AND BRICKS IN ALL PIPES AND OPENINGS CONNECTED TO THE MANHOLE.
2. DRILL TEN (10) ONE-INCH (1") DIAMETER HOLES THRU THE MANHOLE BOTTOM, OR BREAK APART THE MANHOLE BOTTOM BY OTHER METHODS.
3. REMOVE AND DISPOSE OF ALL MASONRY WITHIN 3 FEET OF EXISTING OR PROPOSED GRADE.
4. REMOVE THE FRAME AND LID AND DELIVER TO THE RRWRD COLLECTION SYSTEMS DEPARTMENT AT 4850 TORQUE DR., LOVES PARK IL.
5. FILL MANHOLE AND ALL VOIDS WITH COMPACTED TRENCH BACKFILL (FA-06), OR CLASS 1A BEDDING STONE (CA-07), OR PEA GRAVEL. MATERIAL SHALL BE APPROVED BY ROADWAY AUTHORITY.
6. RESTORE ALL DISTURBED AREAS PER CONTRACT REQUIREMENTS.

Rock River Water Reclamation District

ABANDON SANITARY MANHOLE

(NOT TO SCALE)

rev. 7/29/20

SILT FENCE PLAN

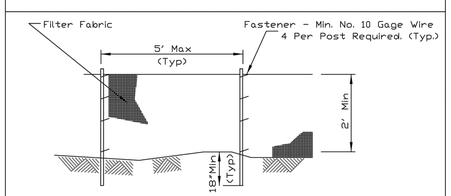

ELEVATION

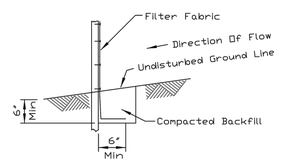

FABRIC ANCHOR DETAIL

NOTES:

1. Temporary sediment fence shall be installed prior to any grading work in the area to be protected. They shall be maintained throughout the construction period and removed in conjunction with the final grading and site stabilization.
2. Filter fabric shall meet the requirements of material specification 592 Geotextile Table 1 or 2, Class I with equivalent opening size of at least 30 for nonwoven and 40 for woven.
3. Fence posts shall be either standard steel post or wood post with a minimum cross-sectional area of 3.0 sq. in.

REFERENCE		STANDARD DWG. NO.
Project		IUM-620A
Designed _____ Date _____		SHEET 1 OF 2
Checked _____ Date _____		DATE 3-16-12
Approved _____ Date _____		

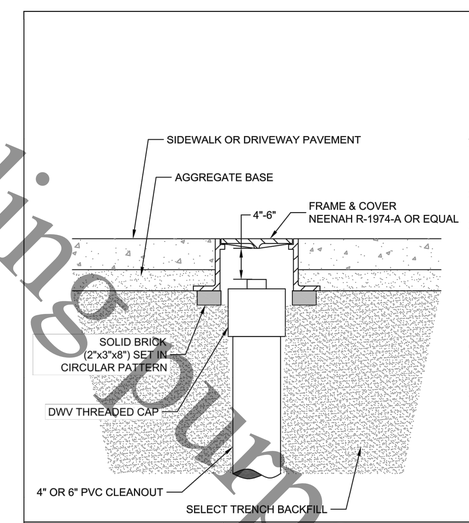

NOTES:

1. SERVICE CLEANOUT CASTINGS ARE REQUIRED FOR ALL CLEANOUTS LOCATED IN PAVED AREAS, DRIVEWAYS, OR SIDEWALKS.
2. THE LOCATION OF THE CLEANOUT SHALL BE APPROVED BY RRWRD.
3. THE FRAME SHALL BE SET ON BRICKS THAT ARE PLACED IN A CIRCULAR PATTERN THE ENTIRE CIRCUMFERENCE OF THE FRAME. THE BRICKS SHALL BE SET ON COMPACTED TRENCH BACKFILL.
4. THE FRAME SHALL BE SET TO AN ELEVATION THAT PROVIDES 4"-6" CLEAR SPACE BETWEEN THE TOP OF THE CLEANOUT CAP AND THE BOTTOM OF THE CASTING LID.
5. THE CONTRACTOR SHALL ENSURE THAT THE CLEANOUT CAP CAN BE UNSCREWED AND REMOVED AND REPLACED WITHOUT HINDRANCE.
6. THE CASTING LID SHALL NOT PROTRUDE ABOVE THE PAVEMENT ELEVATION.

Rock River Water Reclamation District

SERVICE CLEANOUT CASTING DETAIL

(NOT TO SCALE)

rev. 7/20/20

Not to be used for bidding purposes

Rock River Water Reclamation District
ROCK RIVER WATER RECLAMATION DISTRICT
3501 KISHWAUKEE STREET
ROCKFORD, ILLINOIS 61109
(815) 387-7660

No.	DATE	REVISION	INT.

WEST STATE STREET SANITARY SEWER
CAPITAL IMPROVEMENT PROJECT NO. 2014

DETAILS (2)

FOR BID

Sheet No. 14 OF 15

Date 6/2/2021

file: I:\District Projects\W State St Ph 2-2019 Sewer Rehab 0814\01 Design\Drawings\C3D Working\2019 W State\W State 2019.dwg

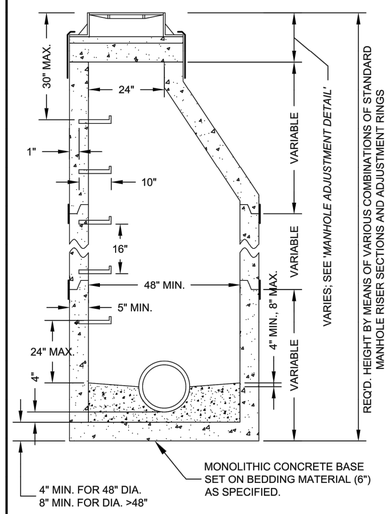

NOTES:

1. THE MAX. DROP FROM THE INVERT OF ANY PIPE TO THE CONCRETE CHANNEL UNDER THAT PIPE SHALL BE 8".
2. MANHOLES LOCATED OUTSIDE OF PUBLIC RIGHT-OF-WAY SHALL BE MARKED WITH A STEEL FENCE POST AS DIRECTED.
3. ALL NEW MANHOLES SHALL BE VACUUM TESTED PER A.S.T.M. C-1244 PRIOR TO ACCEPTANCE.
4. ALL BARREL JOINTS SHALL BE SEALED WITH 3 1/2" x 3/8" BITUMINOUS MATERIAL ON THE LOWER SHIPLAP.
5. ALL BARREL JOINTS SHALL BE SEALED WITH AN EXTERNAL BARREL SEAL CENTERED ON THE JOINT (MAR MAC MACWRAP OR APPROVED EQUAL)
6. MANHOLE STRUCTURE SHALL BE CONSTRUCTED OF PRECAST REINFORCED CONCRETE MANHOLE RISER SECTIONS IN ACCORDANCE WITH A.S.T.M. C478-90 OR THE LATEST DESIGNATION.
7. PRECAST FLAT TOPS ARE NOT APPROVED FOR USE.
8. SEE '*MANHOLE ADJUSTMENT DETAIL*' FOR ADJUSTMENT REQUIREMENTS.
9. PIPE CONNECTIONS TO NEW MANHOLES SHALL BE MADE BY MEANS OF EITHER RUBBER GASKET SEAL (A-LOK OR APPROVED EQUAL) CONFORMING TO ASTM F-477 CAST INTEGRALLY IN MANHOLE WALL, OR RUBBER GASKET SEAL AND STAINLESS STEEL CLAMP (PSX SERIES SIX OR APPROVED EQUAL) CONFORMING TO ASTM C-923. FOR PIPE CONNECTIONS WITH A DEPTH OF >20 FT., A RUBBER GASKET SEAL (A-LOK OR APPROVED EQUAL) CONFORMING TO ASTM F-477 CAST INTEGRALLY IN MANHOLE WALL SHALL BE USED.
10. PIPE CONNECTIONS TO EXISTING MANHOLES SHALL BE MADE BY MEANS OF CORE DRILLING MANHOLE WALL AND INSTALLING RUBBER GASKET SEAL AND STAINLESS STEEL CLAMP (PSX SERIES SIX OR APPROVED EQUAL) CONFORMING TO ASTM C-923.
11. THE MAXIMUM DISTANCE FROM ANY INLET PIPE INVERT TO THE OUTLET PIPE INVERT SHALL BE 2'. A DISTANCE GREATER THAN 2' WILL REQUIRE AN INSIDE DROP CONNECTION PER '*INSIDE DROP MANHOLE DETAIL*'.
12. MANHOLE STEPS SHALL BE NEENAH R-1982-F OR M.A. IND. PS-1 OR APPROVED EQUAL AT 16" CENTERS.

STANDARD MANHOLE DETAIL

('*MANHOLE ADJUSTMENT DETAIL*' SHALL APPLY)

rev. 4/1/19

NOTES:

1. MANHOLE FRAME & LID SHALL BE NEENAH R-1670 OR EAST JORDAN E-1117 WITH NON-ROCKING & SELF-SEALING LID.
2. LID SHALL HAVE 2" HIGH "SANITARY" LETTERING & A CONCEALED PICK HOLE.
3. ALLOWABLE TYPES OF ADJUSTING RINGS INCLUDE PRECAST CONCRETE, HIGH DENSITY POLYETHYLENE (HDPE), & EXPANDED POLYPROPYLENE (EPP). THESE CAN BE USED IN CONJUNCTION WITH EACH OTHER, EXCEPT THAT A PRECAST RING SHALL NOT BE PLACED OVER AN HDPE OR EPP RING.
4. FOR PRECAST ADJUSTING RINGS, ALL ADJUSTING RING JOINTS AS WELL AS THE FRAME TO ADJUSTING RING JOINT SHALL BE SEALED WITH TWO 1" BEADS OF PRE-FORMED RUBBER BUTYL JOINT SEALER, INCLUDING FRAME TO CONCRETE JOINT. WHEN A FRAME REQUIRES PITCHING, A MIN. OF 3 SHIMS EQUALLY SPACED SHALL BE INSTALLED BETWEEN THE FRAME AND CONCRETE AND HYDRAULIC CEMENT SHALL BE USED TO FILL THE VOID BETWEEN THE FRAME & CONCRETE.
5. FOR HDPE OR EPP ADJUSTING RINGS, THE MAX. AMOUNT OF ADJUSTMENT IS 3" FOR HDPE & 6" FOR EPP. HDPE & EPP RINGS SHALL BE INSTALLED ACCORDING TO MANUFACTURER'S INSTRUCTIONS. WHEN A FRAME REQUIRES PITCHING, THE TOP RING SHALL BE AN 'ADJUSTMENT' RING PER MANUFACTURER'S INSTRUCTIONS.
6. NO TARRING OR GROUTING IS ALLOWED ON THE INSIDE OF MANHOLE OR ADJUSTMENT JOINTS.
7. ONLY ONE 2" RING ALLOWED PER MANHOLE. MAXIMUM ADJUSTMENT IS 12". MINIMUM ADJUSTMENT IS 4" UNLESS OFF-ROAD OR IN CURB & GUTTER ROADWAY.
8. WHEN ADJUSTING EXISTING MANHOLES, THE ENTIRE EXISTING ADJUSTMENT SHALL BE REMOVED AND REPLACED.
9. THE COMBINATION OF NEW ADJUSTING RINGS SHALL BE SUCH THAT THE MINIMUM NUMBER OF RINGS POSSIBLE ARE USED.
10. FLAT-TOPS ARE NOT PERMITTED ON 4' OR 5' DIA. MANHOLES.
11. REPLACEMENT OF EXISTING BARREL SECTIONS MAY BE REQUIRED TO MEET THE ABOVE REQUIREMENTS.

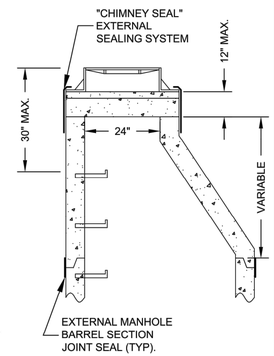

MANHOLE ADJUSTMENT DETAIL

(FOR ADJUSTMENT OF BOTH NEW & EXISTING MANHOLES)

rev. 3/11/20

DROP BOWL & DROP PIPE SIZING TABLE

INLET PIPE DIA.	DROP PIPE DIA. (MIN.)
4-6 INCH	4 INCH
8 INCH	6 INCH
10 INCH	8 INCH
>10 INCH	*
* PER MFG. OR AS DIRECTED BY RRWRD	

NOTES:

1. INSIDE DROP TYPE MANHOLES SHALL BE 5' MIN. INSIDE DIA.
2. ALL INSIDE DROP TYPE CONNECTIONS FOR SERVICES AND COLLECTOR SEWERS SHALL USE THE DROP AS PRODUCED BY RELINER-DURAN INC. OR EQUAL.
3. SEE TABLE FOR DROP BOWL AND DROP PIPE SIZES.
4. ALL INSIDE DROP PIPING SHALL BE PVC SDR35 ASTM-D3034.
5. ATTACH THE ROUND BACK DROP BOWL AND EACH CLAMPING BRACKET TO THE MANHOLE WALL WITH 3/8"x 1" MIN. STAINLESS STEEL BOLTS AND EPOXY IMPREGNATED LUGS PER MFG. RECOMMENDATIONS.
6. ALLOW 1" VERTICAL CLEARANCE BETWEEN INLET PIPE & BOWL.
7. CUT A 1" "V" NOTCH IN INVERT OF INLET PIPE.

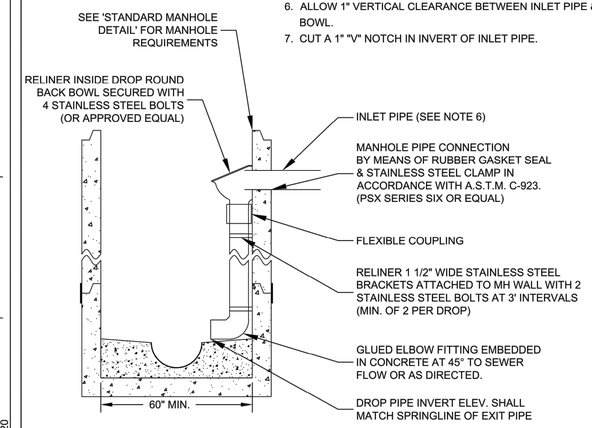

INSIDE DROP MANHOLE DETAIL

('*STANDARD MANHOLE DETAIL*' SHALL APPLY)

rev. 5/15/18

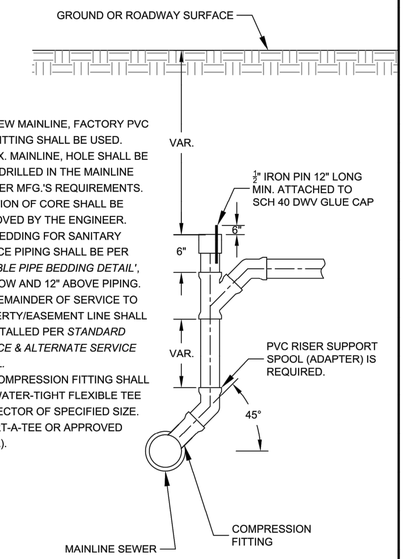

NOTES:

1. FOR NEW MAINLINE, FACTORY PVC WYE FITTING SHALL BE USED.
2. FOR EX. MAINLINE, HOLE SHALL BE CORE DRILLED IN THE MAINLINE PIPE PER MFG.'S REQUIREMENTS. LOCATION OF CORE SHALL BE APPROVED BY THE ENGINEER.
3. PIPE BEDDING FOR SANITARY SERVICE PIPING SHALL BE PER '*FLEXIBLE PIPE BEDDING DETAIL*', 6" BELOW AND 12" ABOVE PIPING.
4. THE REMAINDER OF SERVICE TO PROPERTY/EASEMENT LINE SHALL BE INSTALLED PER *STANDARD SERVICE & ALTERNATE SERVICE DETAIL*.
5. THE COMPRESSION FITTING SHALL BE A WATER-TIGHT FLEXIBLE TEE CONNECTOR OF SPECIFIED SIZE. (INSERT-A-TEE OR APPROVED EQUAL).

VERTICAL SERVICE RISER DETAIL

(FOR MAINLINE DIA. 8" - 18")

rev. 5/15/18

NOTES:

1. REASONABLE CARE SHALL BE USED WHEN BACKFILLING OVER SEWER. NO MATERIALS SUCH AS ROCKS OR BOULDERS SHALL BE PLACED WITHIN 24" OF THE CROWN OF THE PIPE. NO MATERIAL LARGER THAN 8" DIA. SHALL BE USED IN THE BACKFILL.
2. LOOSE MATERIAL TO BE REMOVED OR COMPACTED PRIOR TO PLACING PIPE BEDDING.
3. BEDDING SHALL BE WELL HAUNCHED ALONG PIPE TO ENSURE VOIDS ARE ELIMINATED.

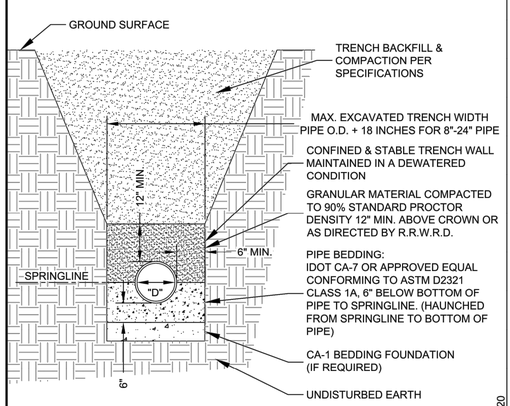

RIGID PIPE BEDDING DETAIL

rev. 3/11/20

NOTES:

1. REASONABLE CARE SHALL BE USED WHEN BACKFILLING OVER SEWER. NO MATERIALS SUCH AS ROCKS OR BOULDERS SHALL BE PLACED WITHIN 24" OF THE CROWN OF THE PIPE. NO MATERIAL LARGER THAN 8" DIA. SHALL BE USED IN THE BACKFILL.
2. LOOSE MATERIAL TO BE REMOVED OR COMPACTED PRIOR TO PLACING PIPE BEDDING.
3. BEDDING SHALL BE WELL HAUNCHED ALONG PIPE TO ENSURE VOIDS ARE ELIMINATED.

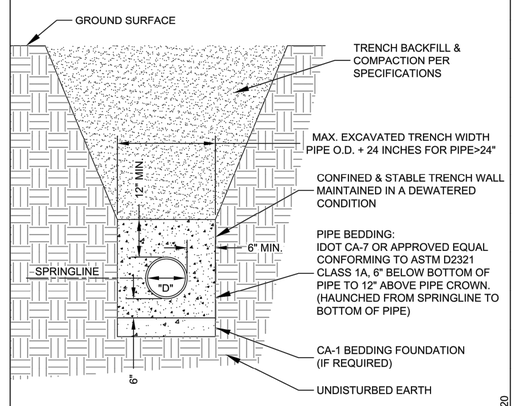

FLEXIBLE PIPE BEDDING DETAIL

rev. 3/11/20

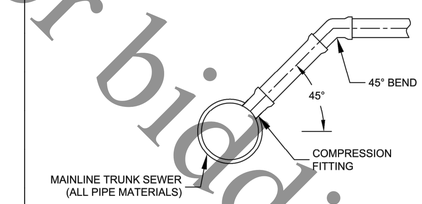

NOTES:

1. SERVICE CONNECTIONS TO SANITARY MAINS 18" DIA. OR LARGER SHALL BE BY MEANS OF INSERTED COMPRESSION FITTING AT A 45° ANGLE FROM HORIZONTAL AS SHOWN.
2. HOLE SHALL BE CORE DRILLED IN THE MAINLINE PIPE PER MFG.'S REQUIREMENTS.
3. LOCATION OF CORE SHALL BE APPROVED BY THE ENGINEER.
4. PIPE BEDDING SHALL BE PER '*FLEXIBLE PIPE BEDDING DETAIL*' 6" BELOW AND 12" ABOVE.
5. THE REMAINDER OF SERVICE TO PROPERTY/EASEMENT LINE SHALL BE INSTALLED PER '*STANDARD SERVICE & ALTERNATE SERVICE DETAIL*'.
6. THE COMPRESSION FITTING SHALL BE A WATER-TIGHT FLEXIBLE TEE CONNECTOR OF SPECIFIED SIZE. (INSERT-A-TEE OR APPROVED EQUAL).

SERVICE CONNECTION DETAIL FOR CONNECTION TO 18" DIA. OR LARGER PIPE

rev. 3/11/20

NOTES:

1. SANITARY SEWER MAINLINE SHALL BE INSTALLED PER '*FLEXIBLE PIPE BEDDING DETAIL*'.
2. PIPE BEDDING FOR SANITARY SERVICE PIPING SHALL BE PER '*FLEXIBLE PIPE BEDDING DETAIL*', 6" BELOW AND 12" ABOVE PIPING.
3. ALL SCH 40 PVC PIPE & FITTINGS SHALL BE PER ASTM D-1785/D-2665.
4. ALL SDR26 WMQ PVC PIPE & FITTINGS SHALL BE PER ASTM D-2241/D-3139.
5. ALL DWV FITTINGS SHALL BE CLEANED, PRIMED, & GLUED.
6. MIN. DEPTH OF COVER SHALL BE 5'.
7. CLEANOUT CAP SHALL BE SCH 40 DWV GLUED CAP FOR NEW DEVELOPMENT OR SCH 40 GLUED SCREW CAP FOR EX. DEVELOPMENT.

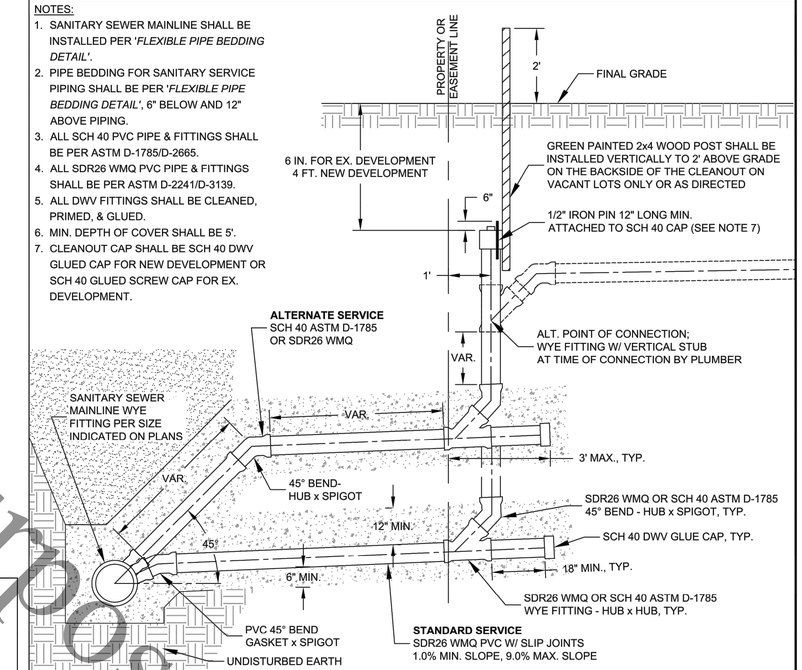

STANDARD SERVICE & ALTERNATE SERVICE DETAIL

(FOR MAINLINE DIA. 8" - 18")

rev. 4/1/19

NOTES:

1. SADDLE TEE OR SADDLE WYE ARE BOTH ACCEPTABLE FOR VCP MAIN.
2. CORE DRILL HOLE IN MAIN OR MODIFY EX. VCP FITTING FOR SADDLE DIMENSIONS.
3. APPLY 2 BEADS OF SILICONE CAULK TO UNDERSIDE OF SADDLE AROUND OPENING.

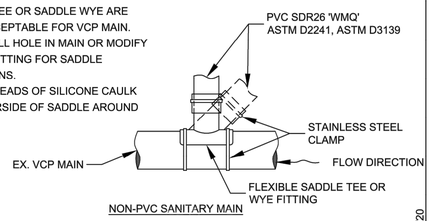

FLEXIBLE SADDLE CONNECTION DETAIL

(FOR SERVICE CONNECTIONS TO NON-PVC SANITARY MAINS LESS THAN 18" DIA.)

rev. 3/11/20

NOTES:

1. ONLY A SADDLE WYE IS ACCEPTABLE FOR A PVC MAIN.
2. CORE DRILL HOLE IN MAIN FOR SADDLE DIMENSIONS.
3. APPLY 2 BEADS OF SILICONE CAULK TO UNDERSIDE OF SADDLE AROUND OPENING.

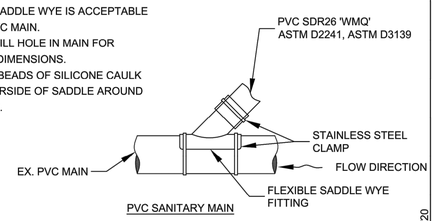

FLEXIBLE SADDLE CONNECTION DETAIL

(FOR SERVICE CONNECTIONS TO PVC SANITARY MAINS LESS THAN 18" DIA.)

rev. 3/11/20

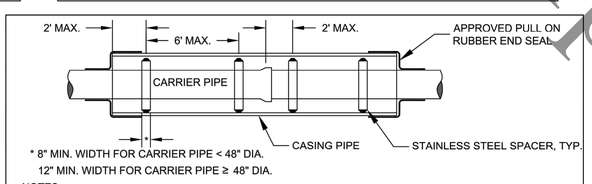

NOTES:

1. CASING END SEALS & SPACERS SHALL BE AS MFG. BY CASCADE MFG., OR APPROVED EQUAL.
2. FOR FLEXIBLE CARRIER PIPE, SPACING OF SPACERS TO BE AS SHOWN, OR PER MFG.'S RECOMMENDATION.
3. FOR RIGID CARRIER PIPE, SPACING SHALL BE PER MFG.'S RECOMMENDATION.

CASING & SPACER DETAIL

rev. 5/15/18

Rock River Water Reclamation District

ROCK RIVER WATER RECLAMATION DISTRICT
STANDARD DETAIL SHEET
(NOT TO SCALE)
3501 KISHWAUKEE ST. P.O. BOX 7480
ROCKFORD, ILLINOIS 61109 PH. (815) 387-7660

15 OF 15

ISSUE 3/11/2020

3/2/2020 Revisions:
Manhole Adjustment Detail: deleted previous note 5. added/modified notes 3,4,5,6,9.
Rigid Pipe Bedding Detail: added leader pertaining to trench wall.
Flexible Pipe Bedding Detail: added leader pertaining to trench wall.
Service Connection Detail For Connection To 18" Or Larger Pipe: added note 1.
Flexible Saddle Connection Details (2): added note below detail name.

not approved for bidding purposes